SIGILLVM · VNIVERSITATIS · CALIFORNIENSIS
LVX
FIAT
MDCCCLXVIII
EX LIBRIS

Principles and Practice of Plumbing

By J. J. COSGROVE

LIBRARY OF THE UNIVERSITY OF CALIFORNIA

Published by

Standard Sanitary Mfg. Co.

PITTSBURGH, U. S. A.

TH 6132
C7

GENERAL

Copyright 1906 by

Standard Sanitary Mfg. Co.

Pittsburgh, U. S. A.

Publisher's Note

So unusual is it for a manufacturer to become a publisher, that a few words explaining our connection with "Principles and Practice of Plumbing" will probably not be amiss.

An explanation leads us back to the announcement made in the initial number of our monthly magazine, MODERN SANITATION (June, 1904). The announcement set forth the fact that in publishing MODERN SANITATION there was no intention to interfere with the established trade papers on sanitation and plumbing materials, and that we would endeavor to make it attractive and valuable by incorporating items and articles of general interest to all of our readers.

In addition to the trade papers, there are numerous worthy works on plumbing and sanitation, each of which when published represented a distinct advancing step, and we feel that the authors of these works will be in hearty accord with "Principles and Practice of Plumbing."

When "Principles and Practice of Plumbing" was first published in MODERN SANITATION, we had no thought of this volume, but as the succeeding chapters of the work appeared, we were frequently requested by prominent architects, plumbers and sanitary engineers to publish the entire work in book form. It is wholly due to these repeated requests that we are now the publishers of this book.

When the idea of our publishing the book was suggested we held back, fearing perhaps that some might gain the impression that it was done as a disguised advertisement to exploit **"Standard"** Porcelain Enameled Plumbing Fixtures. We can plainly state, however, that such is not the case—we are publishing the work solely for the good it may accomplish and we hope that it will completely fulfill its mission.

Standard Sanitary Mfg. Co.

Pittsburgh, U. S. A.

187718

Preface

In preparing the manuscript for this book, the author's sole object has been to systematize and reduce to an exact basis, the principles that underlie the practice of plumbing. The necessity for accurate rules and formulas, instead of the empirical methods formerly employed, was often and forcibly brought home to the author when designing plumbing installations for large buildings. The scarcity of scientific information on this important branch of sanitation was quite marked. No book had ever been published that indicated the best kind of material to use for a given purpose, that told how work should be designed and installed to be perfectly sanitary, and that showed how to proportion the various parts with relation to the whole, so that a plumbing system designed and installed according to the text would give perfect service.

Rules and formulas for proportioning hot and cold water supply pipes were entirely lacking and no literature was available that would be of assistance in determining this most important feature of a building. Neither could anything be had that would indicate the size of piping required to supply a given number of flushing valves for closets, nor that mentioned the numerous other conditions requiring consideration when designing a plumbing installation.

Realizing this, the author gathered much valuable data and worked out many rules and formulas from his private practice, and the gist of the rules, formulas and data have been incorporated in "Principles and Practice of Plumbing" where, for the first time, they were offered to the public.

In planning the scope of the book, it was assumed that the reader knew but little of the subject of plumbing, and had no source of information outside of the book. With this premise in mind an effort was made to prepare the subject matter so clearly and concisely that a person of average intelligence, by following the text, could design and proportion any plumbing installation. That this object has in a measure been realized is evidenced by the interest of architects, engineers and plumbers in the articles when they first appeared in serial form in MODERN SANITATION, and by the large domestic and foreign advance subscription for the work in book form.

It is the intention of the author and publishers to keep "Principles and Practice of Plumbing" the standard work on plumbing and sanitation, and to this end the book will be subject to revision when found necessary. Criticism of the subject matter will be welcome, as by fair and intelligent comment its value will be enhanced.

J. J. COSGROVE

SCRANTON, PENNSYLVANIA
December 15, 1906

Table of Contents

PRINCIPLES AND PRACTICE OF PLUMBING . . 1

- Introductory 1
- General Construction 1
- Requirements of a Perfect System of Plumbing . . 2
- Plumbing Systems 3
- The Drainage System 3
- The House Sewer 3
- The House Drain 10
- Fresh Air Inlets 25
- Rain Leaders 27
- Yard and Area Drains 29
- Stacks and Branches 30
- Fixture Traps 41
- Trap Ventilation 44
- Blow-off Tanks for Boilers 53
- Refrigerator Wastes 55
- Mechanical Discharge Systems 57
- Sub-soil Drainage 63
- Testing Drainage Systems 64

WATER SUPPLY SYSTEMS 71

- Cold Water Supply 71
- Solvent Power of Water 75
- Hydrodynamics 84
- Hydrostatics 84
- Laws of Hydraulic Pressure 84
- Hydraulics 89
- Flow of Water Through Pipes 89
- Friction in Pipes 89
- Measurement of Water 100
- Water Hammer 103
- Materials 112
- Wrought Iron and Steel Pipes 117

Brass Pipes 118
Cocks and Valves 120
Pumps 136
Fire Lines 152
Purification of Water 155
Filtration 155
Softening of Water 161

HOT WATER SUPPLY 167
Water Heating Apparatus 167
Properties of Heat 167
Tanks for Storing Hot Water 199

PLUMBING FIXTURES 221
Soil Fixtures 221
Scullery Fixtures 237
Laving Fixtures 240

APPENDIX 245
Tests of Non-siphon Traps 251
Wrought Iron and Steel Pipes 255

OF THE
UNIVERSITY
OF
CALIFORNIA

Principles and Practice of Plumbing

INTRODUCTORY

GENERAL CONSTRUCTION

SANITATION in modern building is given far more consideration than at any time in the history of architecture. Not only is this true in regard to the increased size of living rooms, the provision made for light and air, and the introduction of ventilation in connection with heating systems, but more particularly in the wonderful improvements in plumbing, both as regards the drainage systems, the water supply and the fixtures. The improvements in workmanship, materials and the systems of installation have so changed the character of plumbing that new standards of comparison are required to determine the quality of work. For instance, while formerly plumbing fixtures were hidden in illy-ventilated, poorly-lighted, out-of-the-way places, and used only as necessities, they now occupy a prominent place in the household of the intelligent, and have become a luxury as well as a necessity.

The improvements in fixtures consist chiefly in substituting porcelain enameled ware for the plain iron, copper, earthenware and wood formerly used; the prohibition of all mechanical closets, with their large fouling chambers, and adopting instead closet bowls with traps combined that are vitreous, non-corrosive and non-absorbent both inside and outside; the connecting of all waste pipes from fixtures with a trap placed as close to the fixture as possible, and, not least in importance, the setting of all fixtures open instead of boxing them in wood, thus doing away with the old incubators for vermin and catch-alls for filth.

The improvements in the systems of drainage within

a building consist of the use of properly proportioned piping, the sizes of pipe being determined by calculation instead of by guess as of old; the perfection of a system of ventilation to keep the air within the drains comparatively pure; improvement in the shapes of fittings; increased weight and better qualities of pipe used, and better methods of joining the pipes; these all contribute their share to the improvement of the system as a whole.

Results of bacteriological investigations having shown that more disease enters a building through the water supply than from the drainage system, certain precautions are taken to minimize the danger from this source. The source of the water supply is selected where there is least danger of contamination or infection, and care is taken to protect the water from pollution while in storage; also ample time is allowed for sedimentation and sunlight to remove bacteria before the water is delivered into the distributing mains. In some places the municipal supply of water is filtered through germ-proof filters before it is delivered to the consumers. Where this is not done separate house filters may be installed by consumers for their own protection.

Requirements of a Perfect System of Plumbing

Among the many requirements of a perfect system of plumbing may be mentioned:

First—An adequate supply of water sufficient in volume and pressure to flush the various fixtures.

Second—Types of fixtures that are made of porcelain enamel, and are set open, and located in well lighted, properly ventilated rooms.

Third—A system having waste pipes large enough to carry off all waste matter discharged into them, yet not so large as not to be self-cleaning.

Fourth—A system of ventilation so planned as to properly ventilate every portion of the drainage system.

Fifth—A quality of piping that will neither corrode easily nor be affected by sudden changes of temperature,

and the joints of which can be made as strong as the pipes themselves.

Sixth—A properly graded, perfectly gas and water-tight system that will discharge by gravity.

Seventh—A system uniformly supported throughout its entire extent, that can neither settle nor swing nor pull on any of its branches.

Eighth—A system of installation that provides turns and offsets of easy angles; that connects its branches at such an angle as not to interrupt the flow of sewage in the main, and that provides clean-outs at such points that the inside of the drainage system is accessible throughout its entire extent.

PLUMBING SYSTEMS

THE DRAINAGE SYSTEM

THE HOUSE SEWER

Plumbing systems for buildings consist of the drainage system and the system of water supply. Drainage systems include the house sewer, house drain, soil waste and vent stacks, branch fixture connections and fixtures, and in some cases the subsoil drainage.

House Sewer Defined—The house sewer is that portion of the drainage system that extends from the street sewer or other place of sewage disposal to a point not less than five feet outside the foundation wall. It receives the discharge from the house drain, rain leaders, yard and area drains, and in some cases from the subsoil drains.

Tile House Sewers—House sewers are generally made of tile pipe, although cast-iron pipe is sometimes used. When constructed of tile pipe, the pipe should be straight, cylindrical, smooth and perfectly burned and should have a good salt glaze over the entire inner and outer surfaces, except the inside of hubs and the outside of the spigot

end, which should be left unglazed, otherwise cement will not adhere to the pipe and an imperfect joint will result.

Methods of Laying Tile Sewer—The usual method of laying tile house sewers is to dig a trench from the street sewer to the house that is to be connected, grading the bottom to as nearly the required slope as possible and laying the pipe on the bottom of the trench. Where the grading is imperfectly done, the pipe must be blocked up in the low spots to the required grade before the joints are made. The joints are made by filling the hubs with mortar made of equal parts Portland cement and sand. When drains are thus installed, the bracings under the pipes are seldom sufficient to hold the pipe in position while the trench is being filled, consequently, the joints are very apt to be broken.

A good method of laying tile pipe is to so dig the trench that the bottom will have a proper and uniform grade, then, by scooping out where the hubs come, the pipe can be laid with a good bearing its entire length on undisturbed earth. This method, when properly carried out, is unquestionably the best known method of laying tile pipe, but great care must be taken in digging the trench so as not to spoil the bearing for the pipe by digging below the grade.

A quick method of laying tile pipe is to dig the trench to the proper grade and bed a line of planks firmly on the bottom; then lay the drain on the planks. By this method the time of leveling each length of pipe is saved, also the time excavating for the hubs, and if the planks are properly graded, the drain is bound to have a proper and uniform fall. Some authorities advocate the bedding of tile pipe in six inches of concrete, but as the concrete would increase the cost of a tile drain to more than the cost of an iron one, it would be better to install an iron drain instead.

Leveling Tile Pipe—The method usually adopted for leveling tile pipe is to place an ordinary spirit level on each length of pipe as it is laid, and raise or lower the free

end of the pipe until the level shows it to be at the required grade. The objection to this method is that unless the end of each length of pipe is properly centered in the preceding hub each length might have a good fall while the entire drain might be level. A better way is to level from the hubs of the pipe. When these are properly graded and the spigot ends of each length of pipe blocked to the required height, the entire drain will have a true and uniform fall.

A straight edge long enough to reach at least four of the hubs should be used for leveling drains. A good straight edge for this purpose can be made by cutting a straight dry piece of white pine six feet long, and jointing the edges perfectly straight and square with the sides. It should be made as much wider at one end as there will be fall in six feet of the sewer; then, by placing the straight edge on the top of the hubs with the wide end toward the outlet, the top of the straight edge will be level when the sewer has the required fall.

Most tile pipes are warped a little in burning so that the lengths are not perfectly straight. Care should be taken, therefore, when laying a tile sewer to see that the bend in crooked lengths is placed at the side and not at the top or bottom where they would form shallow pools for the retention of sewage.

When the tile sewers are laid on planks that are properly graded, all that is necessary is to block up the spigot ends in the hubs. The pipes will need no further leveling.

Tile Pipe Joints—The usual methods of joining tile pipes is to fill the annular space between the hub and spigot with cement mortar and bank it full in front of the joint.

When the inside of the hubs and the end of the pipes are unglazed, this method makes a very fair joint. However, most tile pipe now made have both the hub and spigot salt glazed, consequently, under such conditions, mortar will not adhere to the pipe and the joints soon leak.

Salt glazed pipe can be made water-tight by first

calking the hub half full of oakum, and then cementing the joint as in the first instance. The oakum should not be loosely packed in the hub, but should be calked in hard enough to make the joint water-tight; the cement gives the joint the necessary strength. When tile pipe joints are made with cement mortar without first calking the joints with oakum, great care should be exercised to remove any cement that might be worked through to the inside of the pipe. The cement can be removed by placing in the drain a large swab that completely fills the bore of the pipe, and drawing it along a couple of feet each time a length of pipe is laid.

Tile pipe joints are sometimes made with asphalt; the joints are first made tight by calking with oakum and then poured full with hot asphalt. For many purposes asphalt joints are preferable to cement joints; they are tighter, more flexible, and not so likely to be broken by a settlement of the ground or by jarring of the pipe when the trench is being filled.

Where Tile Sewer Pipe May Be Used—Tile pipe should be used for house sewers only when a natural bed of earth or rock can be obtained to lay it on. It should not be used even then if it is exposed to frost, discharges into a cesspool or passes near a well, spring or other source of water supply.

Objections to Use of Tile Pipe—The chief objection to the use of tile pipe for house sewers is the unsatisfactory joints between the lengths. During dry weather or in localities where the ground water is low, sewage escapes from the sewer into the earth and might wear a channel to some nearby well, cistern, or other source of water supply. During wet weather, or in localities where the ground water is high, water enters the sewer through the joints, a condition that might be serious in case the sewage is treated at a disposal plant.*

* At Grinnell, Iowa, the flow of sewage in wet weather is from three to four times the volume of water pumped from the city wells. No permanent water level, steepage at depths varying from 10 to 40 feet.

Another not uncommon source of trouble from leaky joints are roots of trees that enter in search of water and in course of time completely obstruct the drain.

An Iron Pipe House Sewer possesses many advantages over the tile pipe sewer: It is not so easily broken by settlement of the earth; the joints are perfectly gas and water tight and can not be broken by carelessness in filling the trench; the sewer is not so likely to be affected by upheavals from frost; it can safely be laid close to wells, cisterns or other sources of water supply, in any kind of soil, and it costs but a trifle more than the tile pipe sewer. Iron pipe sewers should be constructed of cast iron pipe; wrought iron or steel pipes are not suitable for this purpose, owing to their comparatively short life when buried in the earth.

Cast-iron pipe sewers may be standard or extra heavy in weight, and either plain or coated. Coated pipe is covered both inside and out with a protective coating of pitch or asphalt, applied hot. This coating is beneficial in many ways—it prolongs the life of the pipe by protecting it from contact with the earth and sewage, and reduces the frictional resistance by forming a smooth surface.

Cast-iron pipe should be sound, cylindrical, smooth, free from cracks, sand holes or other defects, of a uniform thickness and of the following average weights per lineal foot:

Inside Diameter of Pipe	Average Weights per Lineal Foot, Including Hubs	
	Standard	Extra Heavy
2 inches	3½ pounds	5½ pounds
3 inches	4½ pounds	9½ pounds
4 inches	6½ pounds	13 pounds
5 inches	8½ pounds	17 pounds
6 inches	10½ pounds	20 pounds
7 inches	13 pounds	27 pounds
8 inches	18 pounds	33½ pounds
10 inches	25 pounds	44 pounds
12 inches	30 pounds	54 pounds
15 inches	45 pounds	.....

Standard weight pipe can be made tight when great care is exercised in cutting the pipe and calking the joints. Nevertheless, it should be used only on the smaller and least important of installations.

Cast-iron fittings should conform in all respects to all requirements of their respective grades of pipe.

Joints of cast-iron pipe may either be lead calked or rust joints.

Lead Calked Joints are made by calking a ring of oakum tightly into the hub of a pipe or fitting, and then filling the hub with molten lead. The lead contracts in bulk on cooling, and must be calked with a hammer and calking iron to expand it against pipe and hub to make a gas and water-tight joint. One pound of pure soft pig lead for each inch in diameter of the pipe is found sufficient for each joint under ordinary conditions; however, when a cut piece of pipe is being calked, a greater depth of lead is needed to compensate for the loss of the ring on the spigot end of the pipe.

Rust Joints are used in the drainage systems of chemical works, where the acids would affect lead joints; also they are used in cases where a line of pipe will be subjected to such a range in temperature that the alternate expansion and contraction would work lead out of the joints.

Rust joints are made by calking a ring of oakum into the hub, and filling the hub with a mixture composed of:

Flower of sulphur	1 part
Sal-ammoniac	1 part
Iron borings	98 parts

When a slow-setting rust mixture is desired, 198 parts of iron chips are used in place of 98 parts. A preparation is now sold that is easier to apply, quicker to set, and is stronger than a rust joint. While it is more costly than a rust mixture, it is cheaper to use in the end on account of the greater quantity of work that can be done by its use.

Cutting Cast-iron Pipe—Cast-iron pipe is usually cut with a cold chisel and hammer. Recently, however, a special pipe-cutting tool (Fig. 1,) was put on the market that makes a cleaner, quicker and safer cut than a cold chisel. It will cut the lightest standard pipe any distance from the end without cracking it.

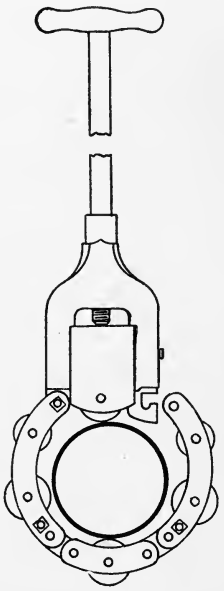

Fig. 1

Connection to Street Sewer—House sewers should be connected to street sewers at an angle of about forty-five degrees, except in the case of large brick street sewers, when the house sewer may enter at right angles. Connections to brick sewers should be made at the side just above the spring of the arch. They should never be made below the water line in the sewer. In tile street sewers, Y branches are usually provided at intervals of about twenty-five feet, to which house sewers may be connected. When branch connections are omitted in the street sewer a length of pipe should be removed at the proper location and a Y branch substituted. A hole should never be cut in a tile street sewer for the house sewer to be connected into.

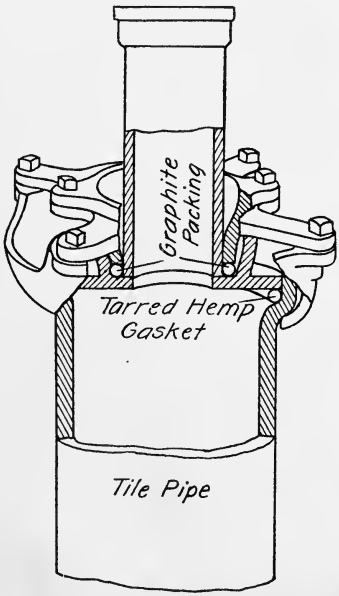

Fig. 2

Connections between tile and iron pipes are usually made with cement joints. A better joint, however, can be had by using an iron and tile pipe connection (Fig. 2) which will

stand a water pressure of forty to fifty pounds per square inch without leaking.

House sewers discharging into tide water should enter below the low water level, and a vent should be placed in the sewer above the high water level to prevent tide water from air locking the sewer. When a plumbing system that drains into tide water is at so low a level that high tide will overflow some of the fixtures or fill the house sewer, a tide water trap (Fig. 3) should be placed on the end of the sewer to prevent tide water entering the pipe. (In the figure the walls of the trap are broken away to show the interior.)

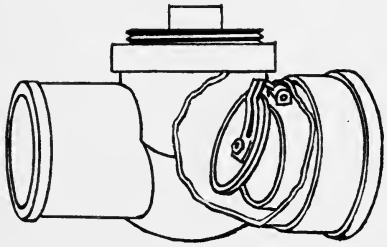

Fig. 3

The usual practice is to make the house sewer one or two sizes larger than the house drain. A better practice, however, is to continue the house sewer the same size as the house drain. By so doing, a uniform velocity of flow is secured in both, and, when the house drain is rightly proportioned, a scouring action is assured.

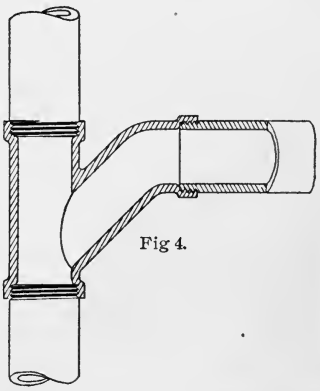

Fig 4.

HOUSE DRAIN

Definition—A house drain is the system of horizontal piping inside of the cellar or basement of a building, that extends to and connects with the house sewer. It receives the discharge of sewage from all soil and waste lines, and sometimes rain water from rain leaders, yard, cellar, area and sub-soil drains.

House drains are generally located below the cellar or basement floor, where they are entirely out of the way.

When properly installed with suitable materials and with clean-out plugs extending flush with the floor, there is no objection to this method of installation. In some buildings where the house drain is to be located below the floor, brick ducts with removable covers of iron or stone are provided to encase it.

In buildings where the basement floor is below the level of the street sewer, the house drain is of necessity located above the cellar floor. The only objection to this method of installation is the fact that the network of pipes forming the house drain interferes with the head room of the cellar.

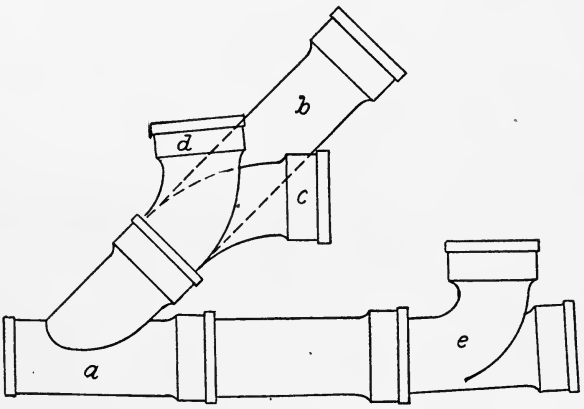

Fig. 5

Materials—When buried in the earth, house drains should be constructed of cast-iron pipe coated with asphalt both inside and out. In buildings over two stories in height they should be made of extra heavy cast-iron pipe; in small cottages standard pipe may be used.

House drains located in ducts or suspended above floors may be of wrought-iron pipe with special cast-iron recessed drainage fittings (Fig. 4) that present a smooth, continuous inner surface to the flow of sewage. The wrought-iron pipe and cast-iron fittings should be coated with asphalt or galvanized both inside and out, and the

ends of all pipes that screw into fittings should be reamed to remove the burr formed by cutting. Tile pipe should never be used in the construction of a house drain.

Connections—Connections to house drains should be made with Y fittings, *a* (Fig. 5); this fitting gives the branch *b* an angle of forty-five degrees, and if it is to be run parallel with the main drain or at right angles to it, the change of direction can be effected by using a ⅛ bend, *c* or *d*. A T fitting never should be used in a drainage system, and a T Y fitting, *e*, never should be used in a horizontal drain. The end of a horizontal drain that turns up to form a soil or waste stack should terminate

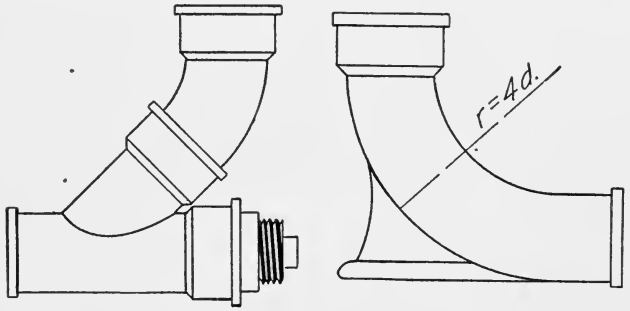

Fig. 6

with a clean-out plug in the end of a Y fitting, as in view *a* (Fig. 6), and the branch of the Y should form the stack connection. If, however, the horizontal drain is but a short branch of the main drain, or is a rain leader, a heel rest quarter bend (view *b*) with a radius of four times the diameter of the pipe may be used. Saddle hubs never should be used for connecting to any part of the drainage system. Changes in the direction of horizontal drains should be made at angles of forty-five degrees, or with large radius quarter bends.

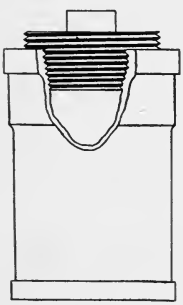

Fig. 7

Clean-out Ferrules—The body of clean-out ferrules (Fig. 7) is made of brass

or cast-iron; fittings of either metal may be used, although cast-iron clean-out ferrules are the better. They are thicker, heavier, more rigid and easier to make tight than brass ferrules, and not so easily bent out of shape when being calked. The plug for clean-out ferrules should be of brass, at least one-quarter inch thick, and the engaging parts have at least six standard iron pipe threads; also they should have a square or hexagonal nut, at least one inch high and one and one-half inches in diameter, so that the nut can be firmly gripped by a wrench when necessary to tighten or unscrew the plug.

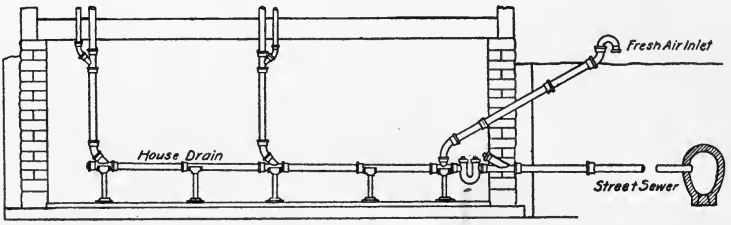

Fig. 8

Clean-out ferrules up to five inches in diameter should be the full size of the pipes, and should be so located in a system of house drains that the interior of the entire system, from the street sewer to the farthest branch, will be accessible. A full sized clean-out ferrule should be calked in the end or branch hub of a Y fitting placed in the house drain where it enters the building (Fig. 8) so in case of stoppage in the house sewer a rod can be pushed clear through the house sewer to the street sewer to dislodge the obstruction. In waste pipes from kitchen or scullery sinks, or other fixtures in which large quantities of grease are emptied, clean-out ferrules should be provided about every ten feet along horizontal runs

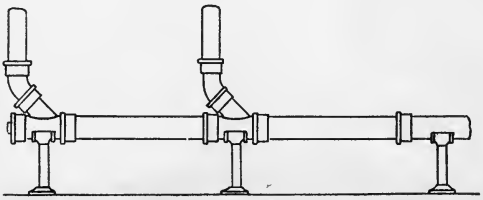

Fig. 9

through which to remove grease that when chilled adheres to the sides of the pipes to such an extent as to sometimes completely close the bore. Clean-out ferrules should also be provided in all main drains, yard, area or rain leader traps, but are never required in vertical stacks of pipes. Before a clean-out plug is screwed into its ferrule the threads should be lubricated with graphite. This is to prevent the threads from corroding and sticking when the plug is to be removed.

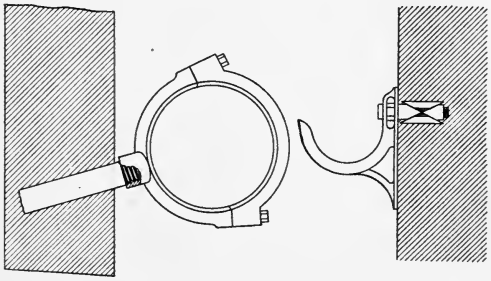

Fig. 10

Supports for House Drains—House drains should be firmly supported throughout their entire extent by rests or hangers spaced about ten feet apart and placed near the hubs and under branch fittings for rising lines. When the house drain is run close to the cellar floor, brick piers or pipe rests (Fig. 9) are generally used; when run some distance above the floor the drain may be secured to the side wall by pipe hangers (view *a*) or by pipe brackets (view *b*, Fig. 10) secured to the wall by expansion bolts; when run near the ceiling the drain should be supported by iron pipe hangers (Fig. 11) fastened to the beams overhead. Pipe hooks should not be used to support the house drain, because they are not sufficiently reliable.

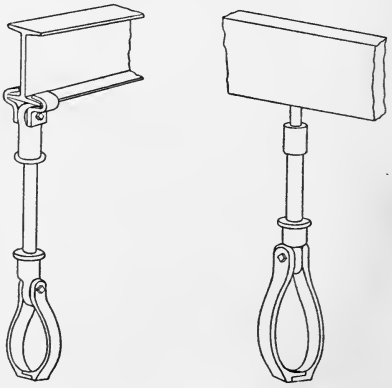

Fig. 11

Main Drain Trap—A main drain trap (Fig. 12) should be provided in every house drain connecting with a cesspool, septic tank or public sewer, to cut off sewer air from the house drainage system. The trap should be located inside of the foundation wall in an accessible position and as close to the wall as practicable. The only fitting intervening between the main drain trap and the foundation wall should be a clean-out Y (Fig. 8). When there is no cellar under a building, the trap should be placed outside of the foundation wall below frost level and a brick manhole built around it to make it accessible.

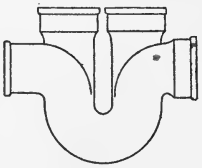

Fig. 12

A main drain trap should have two clean-out hubs in which to calk clean-out ferrules, and these hubs never should be used for other purposes. Main drain traps should be set perfectly level with regard to their water seals. If the heel of a trap is tipped up, the dip of the trap will not retain sufficient water to form an effective seal; and if the outlet to the trap is tipped up, too much water will be retained in the trap and backed up into the house drain.

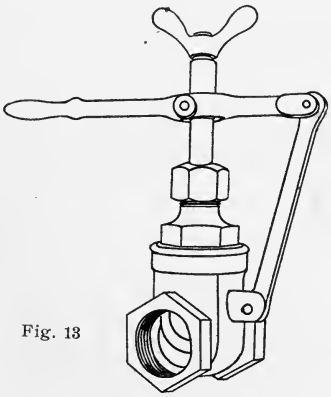

Fig. 13

Mason traps, full S traps, three-quarter S traps, half S traps, traps without clean-outs or with clean-outs that are made tight with putty or gasket joints, never should be used.

Sewer and Tide Water Traps—Some street sewers are so small that water overflows the manholes in the street during excessive rain storms. When a drainage system is connected to such a sewer it should be provided with a tide water trap, and if any fixtures in the building are located below the level of the street, a quick-closing lever handle gate valve (Fig. 13) should also be provided to cut off the

water in case the tide water valve leaks. When there are no fixtures connected to the drainage system below the level of the street, the tide water trap should be located on the street side of the main drain trap. However, when fixtures are located at lower levels than the street surface, they all should discharge into one branch of the house drain, and the tide water trap and quick-closing valve should be placed on that branch. By this arrangement of the valve and tide water trap all fixtures above the street level can be used during overflow periods without overflowing the fixtures at lower levels, as would be the case if the gate valve and tide water trap were placed in the main drain near the main drain trap. Tide water traps should not be used in house drainage systems to the exclusion of main drain traps, but in combination with them. A combination house drain and tide water trap is shown in Fig. 14. (The side of the trap is broken away to show the interior.)

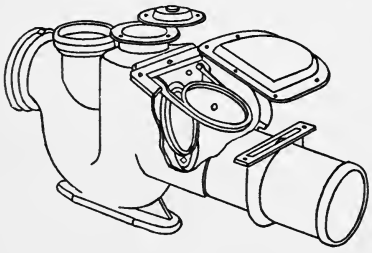

Fig. 14

Floor Drains—In breweries, stables, washrooms, bottling establishments, hotel kitchens or other places where sufficient water is poured or splashed on the floor to maintain the seal of a trap, floor drains (Fig. 15) are permissible. (In the figure the walls are shown broken away to show the interior.) These fixtures should be provided with heavy brass or iron removable strainers and water seal and tide water traps. Floor drains should never be used in cellars or basements of buildings unless they connect to the leader side of a rain leader trap; even then they are objectionable, and,

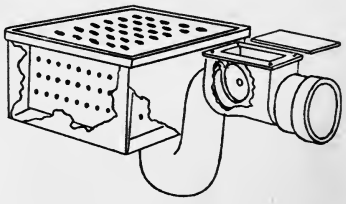

Fig. 15

if used, should be provided with a tide water trap to prevent an overflow of sewage should the main drain become stopped up.

Velocity of Flow in Drains—House drains should be given such an inclination that the sewage will have a velocity of from 180 to 360 feet per minute. With a velocity much less than 180 feet per minute, the water will fail to carry along the solids held in suspension, and with a greater velocity than 360 feet per minute, the water will run away from the more slowly moving solids. The best velocity for sewage is about 270 feet per minute, and drain pipes should be run at the proper inclination to produce this velocity. Pipes of small diameter offer greater frictional resistance than those of large diameter. Therefore, they must be given a greater fall to produce the required velocity. The proper inclination for drains of any diameter and length to produce a velocity of 270 feet per minute, can be found by the formula:

$$f = \frac{l}{10\,d}$$

when f = fall in feet
l = length of drain in feet
d = diameter of pipe in inches

EXAMPLE—What fall should a 6-inch drain, 40 feet long, have to give to the sewage a velocity of 270 feet per minute?

SOLUTION—In this case, $l = 40$ feet, $d = 6$ inches. Therefore, $f = \frac{40}{10 \times 6} = .66$ feet or 8 inches fall per 40 feet of drain.

Expressed in the form of a rule, the foregoing formula reads:

Rule—To one foot of fall in the drain, allow a length of ten feet of pipe for each inch in the diameter of the pipe.

From the foregoing formula and rule the following table is obtained:

TABLE II

Diameter of pipe in inches	2	3	4	5	6	7	8	9	10
Length of drain in feet	20	30	40	50	60	70	80	90	100
Total fall to drain in inches	12	12	12	12	12	12	12	12	12
Fall per foot in inches (approximate)	$\frac{3}{5}$	$\frac{2}{5}$	$\frac{3}{10}$	$\frac{1}{4}$	$\frac{1}{5}$	$\frac{1}{6}$	$\frac{1}{7}$	$\frac{1}{8}$	$\frac{1}{9}$

LIBRARY OF THE

Size of House Drains— A house drain should be large enough to carry off the greatest probable amount of water or sewage that will be discharged into it, without being too large to be self-cleaning. It should never be smaller than the outlet to the largest fixture discharging into the drainage system, and as traps of syphon jet and other improved forms of water closets range in size from 2½ to 3 inches in diameter, a house drain into which a water closet discharges never should be smaller than 3 inches in diameter.

The size of a house drain is determined by the amount of water or sewage it must conduct.

In drainage systems that receive the rain water from roof, yard and areas, the amount of impervious surface to be drained and the rate of precipitation, generally determine the size of the pipe. It has been found from measurements that the total amount of sewage passing a given point in the house drain in a certain period of time is less than one-fortieth the amount of rain water that during excessive rain storms will pass the same point in an equal period of time. In small buildings, therefore, if the house drain is made sufficiently large to carry off all rain water from the projected roof, yard and area surface during excessive and prolonged storms, no extra provision need be made for the small amount of sewage that will be discharged into the drain during short periods of excessive precipitation, which seldom exceed five minutes in duration.

In buildings where the rain water and a large volume of sewage discharge into the same drainage system, the quantity of rain water to be removed should be added to the sewage, and the drain made large enough to carry them both.

The maximum intensity of rainfall, for periods of five, ten and sixty minutes, at weather bureau stations equipped with self-registering gauges, compiled from all available records, can be found in the following table:

* TABLE III — INTENSITY OF RAINFALLS

Stations 6666	Max. Rate in Feet per Hour	Rate of Downfall per Hour for		
	5 Min.	5 Min.	10 Min.	60 Min.
	Feet	Inches	Inches	Inches
Bismarck	.75	9.00	6.00	2.00
St. Paul	.70	8.40	6.00	1.30
New Orleans	.68	8.16	4.86	2.18
Milwaukee	.65	7.80	4.20	1.25
Kansas City	.65	7.80	6.60	2.40
Washington	.63	7.50	5.10	1.78
Jacksonville	.62	7.44	7.08	2.20
Detroit	.60	7.20	6.00	2.15
N. Y. City	.60	7.20	4.92	1.60
Boston	.56	6.72	4.98	1.68
Savannah	.55	6.60	6.00	2.21
Indianapolis	.55	6.60	3.90	1.60
Memphis	.55	6.60	4.80	1.86
Chicago	.55	6.60	5.92	1.60
Galveston	.54	6.48	5.58	2.55
Omaha	.50	6.00	4.80	1.55
Dodge City	.50	6.00	4.20	1.34
Norfolk	.48	5.76	5.46	1.55
Cleveland	.47	5.64	3.66	1.12
Atlanta	.46	5.46	5.46	1.50
Key West	.45	5.40	4.80	2.25
Philadelphia	.45	5.40	4.02	1.50
St. Louis	.40	4.80	3.84	2.25
Cincinnati	.38	4.56	4.20	1.70
Denver	.30	3.60	3.30	1.18
Duluth	.30	3.60	2.40	1.35
Grand totals	13.8726	166.32	128.18	45.65
Averages	.53	6.4	4.54	1.76

*Report of the Chief of the Weather Bureau, 1896-97. A table of lineal inches in decimal fractions of a lineal foot is given in Appendix I.

From the foregoing table it will be seen that the maximum rate of precipitation varies greatly in different parts of the country, therefore when designing a drainage system for a certain locality to take care of the rain water, the maximum rate of precipitation for five minutes in that locality must be taken into consideration in determining its size. When the rate for any particular neighborhood is unknown, the maximum precipitation at the nearest known station may be taken, or a rate of six inches per hour assumed.

The method of calculating the diameter of a drain for any locality is as follows:

Multiply the area in square feet of the surface to be drained by the maximum rate of precipitation in feet per hour in that locality, and divide by 60; this will give the number of cubic feet of water to be removed per minute. Having determined this quantity, the diameter in inches of the pipe required can be found by dividing by 212, extracting the square root and multiplying by 12. This can be expressed by the formula:

$$d=12\sqrt{\frac{a\ p}{12720}}$$

In which d=diameter of pipe in inches
a=square feet of area to be drained
p=maximum rate of precipitation in feet per hour
$12720=212\times60$

EXAMPLE—What size of drain will be required in Kansas City to drain a roof and other impervious surfaces 50×200 feet, the drain being laid at such a grade as to produce a velocity of 270 feet per minute.

SOLUTION—The area a to be drained $=50\times200=10{,}000$ square feet. The maximum rate of precipitation for Kansas City (see Table III) is 7.8 inches $=\frac{7.8}{12}$ or .65 foot per hour. Therefore, $d=12\sqrt{\frac{10{,}000\times.65}{12720}}=12.51=8.5$ inches, the diameter of the pipe required to drain 10,000 square feet impervious surface in Kansas City. There is no 8.5-inch pipe made, so the nearest size should be used.

Drains are sometimes laid at grades that produce greater or less velocities than 270 feet per minute; when so laid the capacities of the pipes can be easily ascertained by referring to the following table, which gives the velocity of flow and the number of cubic feet discharged per minute by specified sizes of pipes when laid at different grades. When the area of impervious surface to be drained, the maximum rate of precipitation, and the grade at which drain is to be laid, are known the quantity of storm water to be removed can be calculated and the size of pipe required to remove it can then be found by Table IV on following page.

TABLE IV

Velocity in feet per minute (as determined by the formula $v=3{,}000\sqrt{\frac{h}{l}\times d}$) and discharge in cubic feet per minute (by the formula $Q=V\,A$) of drains laid at different grades when running full.

In which V = velocity in feet per minute
A = area of pipe in feet
h = head in feet
l = length of the pipe in feet
d = diameter of the pipe in feet

Diameter	2 Inches		2½ Inches		3 Inches		4 Inches		5 Inches		6 Inches	
Fall Ft. in Ft.	Velocity Feet per Minute	Discharge Cubic Feet per Minute	Velocity Feet per Minute	Discharge Cubic Feet per Minute	Velocity Feet per Minute	Discharge Cubic Feet per Minute	Velocity Feet per Minute	Discharge Cubic Feet per Minute	Velocity Feet per Minute	Discharge Cubic Feet per Minute	Velocity Feet per Minute	Discharge Cubic Feet per Minute
1 in 20	273	5.46	297	8.91	335	13.40	390	32.40	432	58.32	480	93.60
1 in 25	246	4.92	273	8.19	300	12.00	345	28.64	387	42.25	450	87.75
1 in 30	220	4.40	249	7.49	270	10.80	312	25.89	351	47.39	390	77.65
1 in 35	264	4.08	228	6.84	250	10.00	288	23.80	324	43.74	360	70.20
1 in 40	192	3.84	216	6.48	237	9.48	272	22.68	306	41.31	330	64.35
1 in 45	180	3.60	201	6.03	222	8.88	255	21.16	288	38.88	315	61.42
1 in 50	174	3.48	192	5.76	210	8.40	243	20.17	272	36.72	300	58.50
1 in 60	153	3.06	174	5.22	190	7.60	216	17.93	245	33.07	270	52.65
1 in 70	144	2.88	162	4.86	177	7.08	204	16.93	229	30.91	252	49.14
1 in 80	135	2.70	150	4.50	165	6.60	198	16.43	210	28.35	214	45.63
1 in 90	129	2.50	144	4.32	156	6.24	180	14.94	201	27.13	222	43.29
1 in 100	120	2.40	135	4.05	150	6.00	170	14.11	192	25.92	210	41.16

Diameter	7 Inches		8 Inches		9 Inches		10 Inches		11 Inches		12 Inches	
Fall Ft. in Ft.	Velocity	Discharge	Velocity	Discharge	Velocity	Discharge	Velocity	Discharge	Velocity	Discharge	Velocity	Discharge
1 in 20	510	135.15	540	189	573	252	620	335	690	455	750	585
1 in 25	480	127.20	480	168	510	224	540	292	570	376	600	468
1 in 30	438	116.07	450	158	471	207	510	275	520	343	540	420
1 in 35	390	103.35	408	143	441	194	456	246	480	316	510	397
1 in 40	363	96.19	390	137	411	180	432	233	450	297	480	374
1 in 45	342	90.63	360	126	390	172	405	218	430	283	450	351
1 in 50	327	86.65	345	120	363	160	390	210	410	270	420	327
1 in 60	288	76.32	309	108	330	145	345	186	360	238	390	304
1 in 70	270	71.55	280	98	306	135	324	175	340	224	360	280
1 in 80	252	66.78	270	94	294	123	309	167	325	214	330	257
1 in 90	240	63.60	258	90	273	120	285	154	300	198	315	245
1 in 100	221	58.56	245	86	258	114	270	146	288	190	300	234

NOTE—To determine discharge in U. S. gallons multiply cubic feet by 7.5.

EXAMPLE—What size of drain will be required in Kansas City to drain a roof and other impervious surfaces, 50 × 200 feet, with the drain laid at a grade to produce a velocity of about 270 feet per minute?

SOLUTION—Area to be drained, 10,000 square feet × maximum rate of precipitation, .65 foot per hour = 6,500 cubic feet per hour = 108 cubic feet per minute. From Table IV is found that an 8-inch pipe laid at a grade of 1 to 60 will discharge 108 cubic feet of water per minute, at a velocity of 309 feet per minute. As this rate of flow is well within the permissible range of velocity, an 8-inch pipe may be used if laid at a grade of 1 to 60.

The size of house drains in systems from which rain water is excluded, is determined by the number of inmates in the building and the per capita consumption of water. It is obvious that the amount of sewage flowing through a house drain cannot exceed the amount of water used in the building, therefore the house drain need only be large enough to carry off the greatest probable amount of water that will be used at any hour of the day.

The per capita consumption of water in many of the New York State hospitals average at present from 150 to 200 gallons of water daily. In the principal cities throughout the United States the per capita daily consumption of water varies from 36 to 300 gallons, with an average from all the cities of 121 gallons. On the whole, it would seem that a per capita allowance of 100 gallons daily would be amply sufficient, and at the same time not too much. A study of Table V shows that in but few cities does the per capita supply fall much below 100 gallons daily, and in those cities that do (all of which are manufacturing cities), it is reasonable to suppose that a large percentage of the people do not use the city water. In the large cities, on the other hand, where from 150 to 300 gallons of water per capita are used daily, allowance must be made for water used for fire purposes, street sprinkling, flushing of sewers, etc., which would bring the average consumption of water within buildings for domestic purposes down to about 100 gallons per day. Of this 100 gallons, 45 per cent. will probably be used during one hour of the day, at the hour that people arise. It will be used as follows:

Water closets	6 gallons
Preparation of meals, etc.	5 gallons
Laving	2 gallons
Bathing	32 gallons
Total	45 gallons

Forty-five gallons per hour equals .75 of a gallon per minute; therefore, to find the amount of water to be removed by a house drain under the foregoing conditions, multiply the number of inmates the building is designed to accommodate by .75 of a gallon, and the product will be the quantity of water or sewage in U. S. gallons to be removed per minute. The size of pipe required to take care of this amount can then be found in Table IV or by the formula

$$d=.234\sqrt[5]{\frac{l\,q^2}{h}}$$

In which d=diameter of pipe in feet
q=cubic feet of sewage delivered per second
h=head in feet
l=length of pipe in feet

EXAMPLE—What size house drain will be required in a hotel built to accommodate 300 guests and servants, the daily per capita allowance of water being 100 gallons, and the drain to be laid at a grade to produce a velocity of about 270 feet per minute?

SOLUTION—$300\times.75=225$ gallons, or $\frac{225}{7.5}=30$ cubic feet of sewage per minute to be disposed of. From Table IV it is found that a 5-inch pipe, when laid at a grade of 1 to 70, will discharge about 31 cubic feet of water per minute. Solving the same problem by means of the formula, we have: q=30 cubic feet per minute, =.5 cubic feet per second, and $q^2=.25$; with the pipe laid at a grade of 1 to 70 we have $d=.234\sqrt[5]{\frac{70\times.25}{1}}=.234\sqrt[5]{17.5}=.412$ feet. Therefore, $d=.412\times12=4.95$ inches; say a 5-inch pipe.

The size of house drains in buildings is sometimes determined by the following empirical rule:

Rule: Allow one square inch in sectional area of the drain for each 2 cubic feet, or 15 U. S. gallons of sewage to be removed per minute.

EXAMPLE—What size pipe will be required to remove 108 cubic feet of water per minute when the drain is laid at a grade to produce a velocity of about 270 feet per minute?

SOLUTION—108÷2=54 square inches area, and from Table VI it will be seen that a pipe of about 8¼ inches diameter has the required area. An 8-inch pipe, therefore, would be used.

TABLE V

Per capita daily water consumption in the fifty largest cities of the United States in 1890 and in 1900, arranged in order of population.*

Cities	Per Capita Consumption in Gallons		Increase or Decrease in Consumption in Ten Years in Gallons	
	1890	1900	Incr.	Decr.
1. †New York	79	116	37	....
2. Chicago	140	190	50	....
3. Philadelphia	132	229	97	....
4. †Brooklyn	72	....	....	....
5. St. Louis	72	159	87	....
6. Boston	80	143	63	....
7. Baltimore	94	97	3	....
8. San Francisco	61	73	12	....
9. Cincinnati	112	121	7	....
10. Cleveland	103	159	56	....
11. Buffalo	186	233	47	....
12. New Orleans	‡37	‡48	11	....
13. Pittsburgh	144	231	87	....
14. Washington	158	185	27	....
15. Detroit	161	146	....	15
16. Milwaukee	110	80	....	30
17. Newark	76	94	18	....
18. Minneapolis	75	93	18	....
19. Jersey City	97	160	63	....
20. Louisville	74	100	26	....
21. Omaha	94	176	82	....
22. Rochester	66	83	17	....
23. St. Paul	60	67	7	....
24. Kansas City	71	62	9	...
25. Providence	48	54	6	....
26. Denver	....	300	....	....
27. Indianapolis	71	79	8	....
28. Allegheny	230	....	....	....
29. Albany	....	191	....	....
30. Columbus	78	230	152	....

* The classification is by the census of 1890, so as to include all the cities in the earlier grouping.

† New York and Brooklyn consolidated since 1890

‡ Only a small part of the population supplied.

TABLE V — Continued

Per capita daily water consumption in the fifty largest cities of the United States in 1890 and in 1900, arranged in order of population.*

Cities	Per Capita Consumption in Gallons		Increase or Decrease in Consumption in Ten Years in Gallons	
	1890	1900	Incr.	Decr.
31. Syracuse	68	102	34	....
32. Worcester	59	70	11	....
33. Toledo	72	119	37	....
34. Richmond	167	100	....	67
35. New Haven	135	150	15	....
36. Paterson	128	129	1	....
37. Lowell	66	85	19	....
38. Nashville	146	140	....	6
39. Scranton	....	....	....	....
40. Fall River	29	36	7	....
41. Cambridge	64	79	15	....
42. Atlanta	36	84	48	....
43. Memphis	124	125	1	...
44. Wilmington	113	90	....	23
45. Dayton	47	62	15	....
46. Troy	125	183	58	....
47. Grand Rapids	....	156	....	....
48. Reading	75	92	17	....
49. Camden	131	280	149	....
50. Trenton	62	99.9	37	....

* The classification is by the census of 1890, so as to include all the cities in the earlier grouping.

FRESH AIR INLETS

Definition—A fresh air inlet is a pipe connected to the main house drain inside of the main drain trap, and extending to a point outside of the building where it is open to the atmosphere. Its object is to admit fresh air to circulate through the drainage system to keep the air within comparatively pure; also to act as a relief pipe to prevent compression of air within the system when a heavy flush of water, in descending, fills the pipe full bore, or when a strong gust of wind blows down the vent stacks from above the roof. If a passage for the escape of air were not provided for such occasions the compression of air in the drain pipes would force drain air through the seal of

some of the traps. It is quite evident from the function of a fresh air inlet that any form of check valve or inlet fitting that prevents air escaping from the mouth of the pipe during heavy discharges or "blow backs" should not be used.

Connection to House Drain—The fresh air inlet should connect to the house drain by means of a T branch. It should never connect to the cleanout opening of a trap. In cold climates, such as the northern part of the United States and Canada, the fresh air inlet should be connected to the main drain from 5 to 15 feet inside of the main drain trap. If connected to the main drain near the trap the rapid circulation of cold air through the system will, in winter weather, freeze the water in the trap.

Location of Outlet—The mouth of a fresh air inlet should be located at least 12 feet from all windows, doors, ventilator shafts or flues communicating with a building, and the end should be so protected that it cannot be obstructed by children or choked with dirt, water, snow, leaves or ice. In some of the large cities the fresh air inlet opens into the side of a box located at the curb, and is protected by a removable metal grating. When so located, the bottom of the box should extend at least 18 inches below the bottom of the pipe to prevent the mouth of the fresh air inlet becoming choked with dirt. The principal objections to this form of inlet are, first, the box is seldom, if ever, cleaned, and in the course of time fills up with dirt; second, during winter weather the grating becomes completely choked with snow and ice. City houses are built so closely together, however, that the only other available place to locate the fresh air inlet is on the roof of the building, and in some localities it is there located, although this method gives a poorer circulation than the other.

In detached houses the fresh air inlet generally is extended 15 or 20 feet away from the building, and the end protected with a return bend that opens facing the ground. When this form of inlet is used, it is good

practice to locate the inlet in a clump of bushes or some other place equally inaccessible to children.

When sufficient space can be found in the foundation wall of a building, near the main drain trap and far enough from all openings to the house, the fresh air inlet can be located there, and the inlet protected by a metal strainer *a*, Fig. 16, secured to the stone work. This makes a very superior form of inlet. In fresh air inlet grates the openings should equal in area the size of the fresh air inlet pipe, and the size of the openings in the grate should be not less than one-half inch in their least dimension.

Size of Fresh Air Inlets—Fresh air inlets should be the full size of the house drain for all sizes of drains up to 4 inches in diameter. For 5 and 6-inch drains it should be not less than 4 inches in diameter. For 7 and 8-inch drains not less than 6 inches in diameter, and for larger drains not less than 8 inches in diameter.

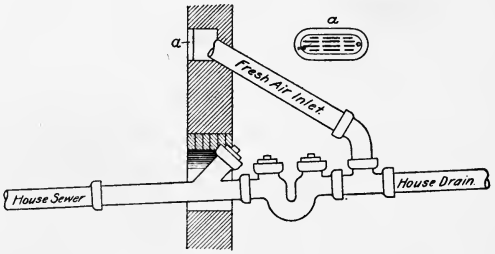

Fig. 16

RAIN LEADERS

Kinds of Leaders—Rain leaders may be divided into inside leaders and outside leaders. *Inside leaders* are located within some parts of the building secure from frost, and are installed by the plumber. They are made of cast iron or wrought iron pipe and put together perfectly gas and water-tight. *Outside leaders* are usually made of sheet metal with loose slip joints, and from a point about 5 feet above grade, are installed by the sheet metal worker. Up to a point 5 feet above grade outside leaders should be of cast iron or wrought iron pipe to withstand the rough usage they are likely to receive.

Trapping of Leaders—Rain leaders usually are trapped with a running trap placed in the horizontal part of the

leader just inside the cellar wall, secure from frost. When inside leaders are used, however, or when outside leaders are made perfectly gas and water-tight and do not open near windows, doors, flues or ventilator shafts, a better practice is to omit the trap and use the leader also for a vent pipe.

Roof Connections—Inside rain leaders should be connected to the roof gutter by means of a short length of 8-pound lead, or 18-ounce seamless drawn copper tubing, securely soldered to the gutter and calked or screwed into the iron pipe by means of solder nipples or brass ferrules solder wiped to the lead or copper pipe. The mouth of the leader should be made funnel-shaped to provide an easy entrance for the rain water without loss of head, and the inlet should be protected with a brass wire basket to keep out leaves and other foreign matter. Roofs that are surrounded with parapet walls should have overflows built in them through which water can escape in case the leader inlet is obstructed with ice.

Outside leaders should be provided on the top with a service box, into which the roof water can discharge. This service box should be set low enough so that in case the leader becomes stopped with ice, the water can overflow the box without backing up on the roof. The principal objection to outside leaders is that they freeze and burst. In cold climates outside leaders are a source of worry and expense that can be avoided by the additional first cost of inside leaders. The bursting of outside leaders from frost can be reduced to the minimum by using corrugated pipe in place of cylindrical; then, when the water expands upon freezing, the corrugations yield to the pressure without the pipes bursting. Cast iron pipe with lead calked joints never should be used for soil waste or leader pipes where exposed to frost. Even though the pipe is usually empty, the oakum used in calking the joints becomes wet from the water flowing through the pipe, which, upon freezing, forces the lead out of the joints, causing leaks.

Size of Leaders—Rain leaders never should be less than 2 inches in diameter. For leaders larger than 2 inches in diameter the size can be determined by the rule for determining the size of house drains. In applying this rule, however, the fall of the horizontal portion of the leader must be taken for the head, as the leader, when running full with only the head due to the grade, must be of sufficient size to carry off the greatest possible rainfall. The following simple empirical rule, which is derived from the foregoing rule, will determine the size of leaders with sufficient accuracy for all purposes :

Rule—Allow 1 square inch in sectional area of the leader for each 250 square feet of projected roof surface.

Example—What size of leader will be required to drain a roof 75 feet long by 50 feet wide?

Solution— $\frac{75 \times 50}{250} = 15$ square inches, and from Table VI it is found that a 4½-inch pipe has an area slightly greater than 15 inches.

The area in square inches and in square feet of pipes from 2 inches to 12 inches in diameter can be found in table VI:

Table VI—Diameter and Area of Pipes

Diameter of pipes in inches	2	2½	3	4	4½	5	6	7	8	9	10	12
Areas of pipes in sq. inches .	3.14	4.9	7.06	12.57	15.9	19.63	28.27	38.48	50.25	63.61	78.54	113.1
Areas of pipes in sq. feet . .	.02	.03	.04	.083	.11	.135	.195	.265	.35	.44	.54	.785

Yard and Area Drains

Yard and area drains in a sense are rain leaders. Their object is to remove storm water from yard and area surfaces; therefore, what has been written about the size and materials of rain leaders will apply equally to yard and area drains.

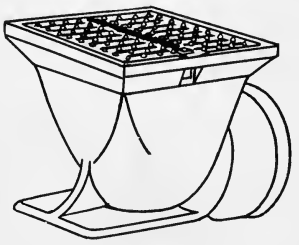

Fig. 17

Yard and Area Catch Basins (Fig. 17) are simply plain cast iron receptacles with removable perforated covers; they are located

in the yard or area to be drained for the rain water to drain into. Catch basins should be so constructed that all water will drain out of them immediately, and the area of perforations in the covers should be equal to twice the area of the drain pipe.

Trapping Yard and Area Drains—Yard and area drains should be trapped with running traps located inside of the foundation walls where they are accessible and safe from frost. When convenient to do so they should connect to a rain leader. If the rain leader is trapped the yard or area drain should connect to it on the yard side of the trap, and the leader trap will then serve for both. The objects of connecting a yard or area drain to a rain leader are to insure a permanent seal to the trap, or in the event of the seal failing, to provide a draft, down through area drain and up through the rain leader.

STACKS AND BRANCHES

Definitions—Soil stacks are those that receive the discharge from water closets and urinals, although they may also receive the discharge from other fixtures. They connect with the house drain in the cellar or basement, and extend to a suitable point above the roof.

Soil Pipes are the branches that connect closets or urinals with soil stacks.

Waste Stacks receive the discharge from fixtures other than water closets or urinals. They also connect with the house drain and extend to a suitable point above the roof.

Waste Pipes are those that connect any fixtures other than water closets or urinals with either a waste stack or a soil stack.

A Vent Stack is a special ventilating pipe that connects with a soil or waste stack below the lowest fixture and extends to a point above the highest fixture, where it may again connect with the stack or extend separately through the roof. No soil or waste matter discharges into this pipe. Its function is to provide a supply of air to the

outlets of fixture traps, to prevent the water seal being broken either by siphonage or by back pressure. That portion of soil and waste stacks above the highest fixtures may be considered as vent stacks.

A Vent Pipe is a short branch extending from the vent stack to the trap it ventilates.

Examples of Installation

There are two systems of stacks and branches in use at the present time, the *two-pipe system* and the *single-pipe system.* In the two-pipe system siphon traps are used, and their seals are protected from siphonage by a system of vent pipes. The principles of installation of the two-pipe system are shown in Fig. 18. In this system a vent stack intersects the soil stack at an angle of 45 degrees at a point below where the lowest fixture discharges into the soil stack. The object of connecting the soil and vent stacks together at this point is to provide an outlet from the vent stack

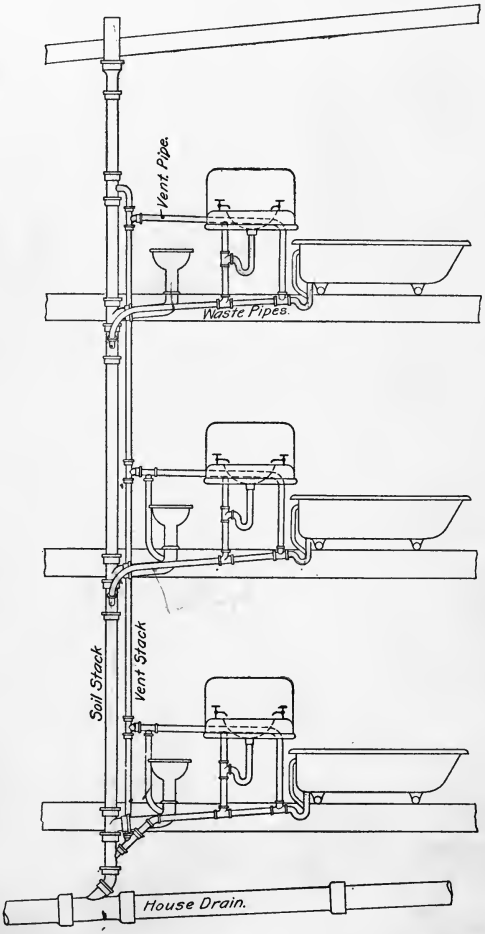

Fig. 18

into the soil stack for rust scales or other foreign matter that might enter it. In the illustration the vent stack rejoins the soil stack at a point above the level of the highest fixture discharging into it. This connection is made only for economical reasons, however. The vent stack may be extended separately through the roof, and in buildings over six stories in height it is better to do so. On stacks three or more stories in height the waste pipe from the wash basin and bath tub on the first floor is generally connected to the heel of the vent stack to wash out any foreign matter that might lodge there. This provision, however, is of more importance in wrought iron systems than in cast iron systems, owing to the greater possibility of wrought iron stacks being stopped at this point by rust scales. Connections to vent stacks are made at a point above the level of the outlet from the highest fixture in the group; and all the vent pipes drain toward their respective traps so that water of condensation or sewage that backs up in the vent pipes, during stoppage of the waste pipe, will drain out again when the waste pipe is clear. Should the connection to the vent stack be made at a level lower than the outlet from the fixtures, the waste pipe might become stopped up and the fixture would waste through the vent pipe without the stoppage becoming known. The principles and practice of the two-pipe system are fully explained in the foregoing description. More fixtures may be connected to a stack or more stacks may be installed in a building, but they are only a multiplication of units of which Fig. 18 is an example. In the two-pipe system of plumbing, as in all systems of piping, the more direct the pipes are run and the fewer fittings used the better the work will be; however, as the tendency of the times is towards a multiplicity of pipes and fittings, the following examples of how the two-pipe system should be installed are subjoined. When two fixtures on one floor are located on opposite sides of a partition, and there are no other fixtures above that floor, they can be cheaply, neatly and properly connected as shown in

Fig. 19. By this method of installation no pipes are exposed outside of the partitions and each trap is effectively ventilated. It should be borne in mind, however, that a sanitary cross (Fig. 20) must be used with this method of installation. If a double Y fitting (*a*, Fig. 19) were used instead, the waste pipes *b*, *b* (indicated by dotted lines) from the traps would form long legs of siphons that would empty the traps at each discharge from a fixture.

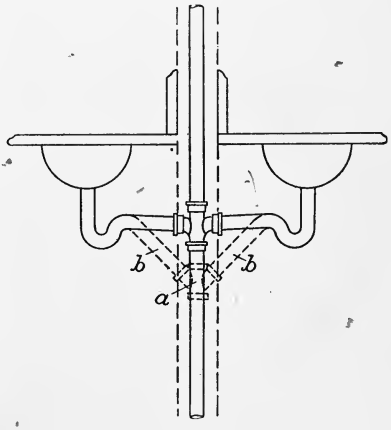

Fig. 19

When fixtures on two floors are located on opposite sides of a partition they can be properly and economically connected as shown in Fig. 21. In this method of installation separate waste stacks are run to the fixtures, on the different floors, and the stacks continued up to the roof to serve as vent pipes. It is simply applying the principles of Fig. 19 to fixtures on two floors. In Fig. 22 fixtures are located on opposite sides of a partition on three or more floors. It would be too cumbersome and expensive to carry separate stacks to each floor as is done in Fig. 21, so a soil stack and vent stack are run, and between the walls of the partition, at the intermediate floors, the vent stack is connected to the waste stack and a sanitary cross in the connecting branches used on the same principle as in Fig. 19. On the first floor both fixture wastes are connected direct to the vent stack. This is to simplify the construction and wash out of the vent stack any rust scales or other foreign matter that might lodge there. On the top floor both fixture wastes are direct

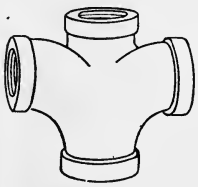
Fig. 20

connected to the waste stack. This makes a perfectly sanitary connection and simplifies the construction. All of the examples of roughing illustrated possess the additional advantage of having concealed in the partition all waste and vent pipes except the short lengths of waste pipe from the fixture traps to the wall; furthermore, when the waste pipe to the fixtures is brought back through the wall, it leaves the floor space beneath the fixtures free from pipes.

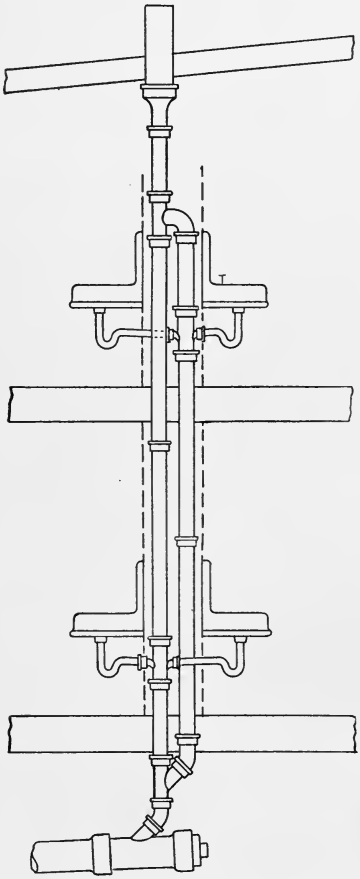

Fig. 21

Example of One-pipe System—This illustration, Fig. 23, should be compared with the illustration of a two-pipe system, Fig. 18. In the one-pipe system non-siphon traps are used without vent pipes. This method of piping reduces the cost of roughing to almost one-half the cost of the two-pipe system, and necessitates less cutting of walls and floors. From a sanitary standpoint the one-pipe system, with approved non-siphon traps, is equal, if not superior, to the two-pipe system. It is open, however, to the objection that a slight gurgling noise might be heard in the waste pipes, due to siphonic action of the trap when a fixture is flushed. Closet traps are not made non-siphon, hence to protect their seals from being lost it is necessary to back vent the closet bend below the floor. This can

be done as shown in the illustration, by connecting the back vent pipe to the main soil stack at least one foot above the level of the closet seat. If siphon-jet or wash-down water closets are used the top closet need not be vented. It is not to protect the closets from self-siphonage, but from siphonage by aspiration that in this case the back venting is resorted to.

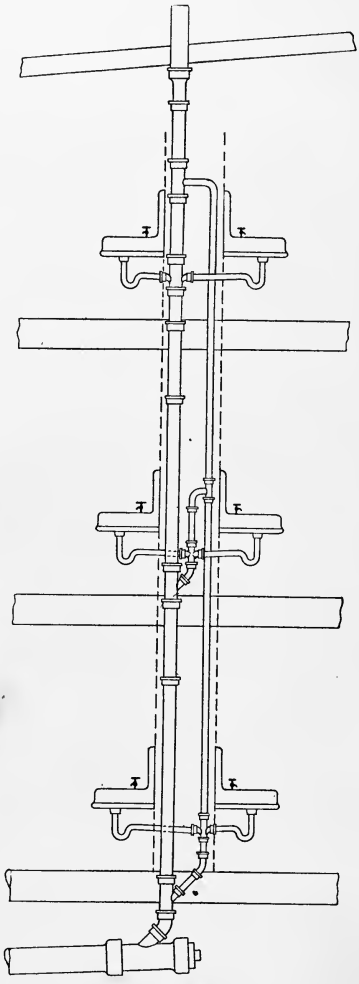

Fig. 22

Expansion of Soil and Waste Lines—When soil and waste stacks are installed in high buildings, local conditions might be such that allowance should be made for expansion and contraction; under ordinary conditions, however, in buildings of moderate height no special provision need be made for expansion; the spring of wrought-iron pipe and flexible joints to cast-iron pipe compensating for any variation of length due to temperature. As a matter of fact, the range of temperature during the year should not vary 40 degrees Fahr. It is doubtful if it would vary half that much, but assuming a variation of temperature during the year of 40 degrees Fahr., the expansion of a wrought iron pipe in a building 300 feet high would be less than one inch. The vertical parts of a building, however, are subject to very much the same

range of temperature as the pipes, and the entire building will expand correspondingly with the pipes. While special provision need seldom be made for expansion, some provision should be made to allow for settlement of a building without damage to the drainage system. Pipes should be kept free from structural beams and connections to stacks should be made with swing joints to allow for settlement.

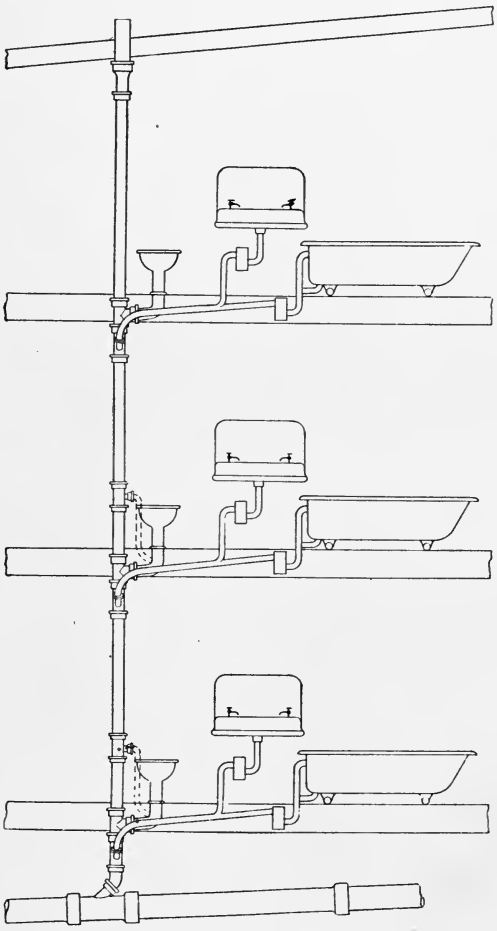

Fig. 23

Outlets to Stacks Above Roof—In cold climates vent stacks should be increased in size where they pass through the roof. If they are less than 4 inches in diameter they should be increased to 4 inches; and if they are 4 inches or larger in diameter they should be increased one size before passing through the roof. The object of increasing the size of vent stacks where they pass through the roof of a building is to reduce the possibility of the outlets becoming choked with hoar frost

CALIFORNIA

during cold weather. The increase in size should be made at least 1 foot below the under side of the roof, and a long increaser fully 16 inches long should be used. In cold climates vent stacks should not extend more than 12 inches above the roof, as there is greater probability of becoming choked with hoar frost.

Roof Flashings—Where vent stacks pass through a roof the openings around the pipes should be made perfectly storm-tight, by flashings of sheet lead or copper. A good method of flashing for use in most climates is shown in Fig. 24. This consists of a collar (*a*) of lead soldered to a flange (*b*) at the same angle as the pitch of the roof; the top edge of the collar is made tight around the pipe by working a bead (*c*) tightly around the pipe with a gasket (*e*) of asbestos packing and white lead in between. This makes not only a tight connection, but also a flexible one that is not affected by a settlement of the pipe.

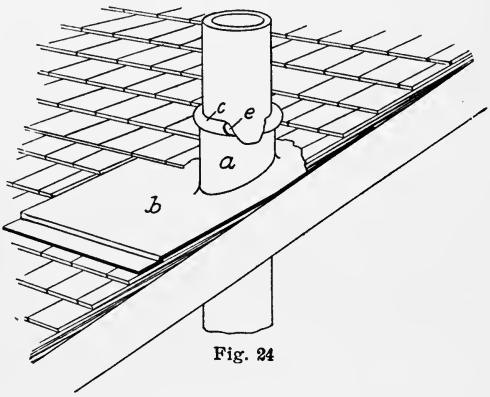

Fig. 24

In severe climates, where there is danger of hoar frost stopping the outlet of the stack, it can be checked to a great extent, and in some cases entirely prevented by flashing the opening in the manner shown in Fig. 25. In this method the pipe extends to a height of about 12 inches above the roof, and the opening through the roof is made 2 inches larger than the pipe, so there will be a 1-inch space all around it. The collar of the flashing is then made the same size as the hole in the roof, and is turned over and calked into the top of the stack as shown. This construction provides an air space around the pipe that is open to the attic and keeps the temperature of the exposed

pipe at about the same temperature as the inside of the building. On tin or copper roofs the outer edge of the flange of either style of flashing should be well soldered to the metal; on tar, cement or asphalt roofs the flange should be placed between layers of roofing material and the finishing course laid upon it. On wooden or slate-shingled roofs the upper edge of the flange should extend at least two courses up under the shingles, and the exposed edges on wood-shingled roofs well tacked down with short nails having large heads.

Sheet copper for flashings should weigh at least 16 ounces to the square foot, and sheet lead at least 6 pounds to the square foot. The roof flange of a flashing should extend at least 6 inches on all sides of the stack. Outlets to stacks above a roof should be free from caps, cowls or bends, as they obstruct the opening, easily choke with hoar frost, and interfere with the free passage of air. Outlets should be located well away from the windows, doors or ventilating shafts leading to the interior of a building, and, when practicable, should be a reasonably safe distance away from smoke flues. On buildings that have the ordinary pitch roof and on all kinds of roofs in cold climates vent stacks need only extend from 12 to 18 inches through the roof. On buildings with flat roofs having parapet walls the top of the stacks should extend at least 6 inches above the level of the walls. On tenement houses or other buildings where the roof is easily accessible, and used by the inmates, the top of all stacks should be at least 5 feet above the roof, and the outlet protected by a heavy brass

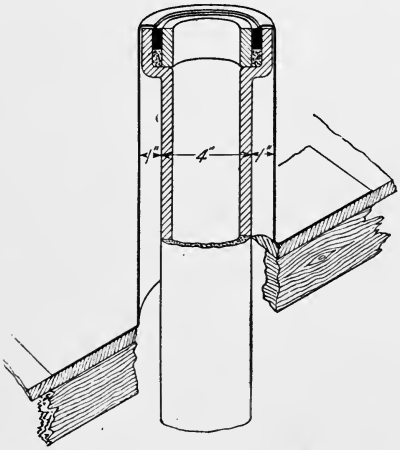

Fig. 25

wire basket securely fastened to the opening to prevent articles being dropped into the stacks.

Size of Soil and Waste Stacks—Under ordinary conditions, soil or waste stacks need not be larger in diameter than the largest branch discharging into them. However, in the case of large buildings many stories in height and with many fixtures connecting to a stack, the size should be determined by the rule for calculating the size of drain pipes, the head or fall being considered the same as for the corresponding sizes of main house drain.

Size of Vent Stacks—Vent stacks should never be smaller than 2 inches in diameter. When the accompanying soil or waste stack is 4 inches or larger in diameter, the vent stack need have an area of only one-fourth (a diameter of one-half) that of the soil or waste pipe. The reason vent stacks can be smaller than soil or waste stacks is that air flows more than four times as readily as water, hence, enough air can flow in a vent pipe of given size to prevent a vacuum forming in a soil or waste pipe of four times its capacity. The proper size of vent stack to accompany any size soil or waste stacks can be found in the following table:

TABLE VII—SIZE OF VENT STACKS

Diameter of soil or waste stack in inches	2	3	4	5	6	7	8	9	10	11	12
Diameter of vent stack in inches	2	2	2	2½	3	3½	4	4½	5	6	6

Size of Soil and Waste Pipes—Soil and waste pipes should always be the full size of the waste outlets from fixtures. The outlets should be sufficiently large to permit the fixtures being emptied quickly so as to thoroughly flush the waste pipes, and the waste outlets should be unobstructed by strainers, cross-bars or other devices that will catch fibrous materials or obstruct the flow of water. Formerly water closet outlets were made 4 inches in diameter and soil pipes were made correspondingly large; recently, however, the manufacture of closets has

undergone a change both as to types and sizes, and water closets are now made with traps seldom over 3 inches, and usually only 2½ inches in diameter. The consequence of this change in the size of closet traps is that soil pipes are now made 3 inches in diameter and soil stacks in ordinary cottage buildings are made the same size. A distinct advantage gained by this reduction in size of closet traps and soil pipes is that soil stacks in small buildings can more easily be concealed in partitions now than formerly when 4-inch pipes were used.

Size of Vent Pipes—For traps 3 inches and more in diameter vent pipes 2 inches in diameter are used; for 2-inch trap, a 1½-inch vent pipe is used, and for any trap smaller than 2 inches in diameter the vent pipe should be the full size of the trap, to reduce the possibility of stoppage should the waste pipe become choked and sewage back up in the vent pipes.

From experience and experiment the following sizes of soil, waste and vent pipes are derived:

TABLE VIII—SIZES OF SOIL, WASTE AND VENT PIPES

Kind of Fixture	Diam. of Soil or Waste Pipe in Inches	Diam. of Vent Pipe in Inches
Water closets	3	2
Bath tubs	1½	1½
Lavatories	1½	1½
Bidets	1½	1½
Shower baths	1½	1½
Sitz baths	1½	1½
Slop sinks	2 to 3	1½ to 2
Kitchen or pantry sinks	1½ to 2	1½
Laundry trays	1½	1½
Urinals	1½	1½
Drinking fountains	1¼	1¼

Waste pipes from fixtures to the stack should have as much fall as can be conveniently given; owing to their small diameters and the proportionally large amount of frictional resistance they offer to the flow of sewage they cannot be given too much pitch.

Supports for Stacks—Soil and waste stacks should be firmly supported at their base by a brick pier or iron pipe rest placed directly under the stack. If the house drain is suspended from the ceiling beams, a strong iron hanger should be placed on the drain close to the stack and when possible to place two hangers, one on each side of the stack, it should be done. Besides supporting stacks at their base they should also be supported at each floor of the building by heavy iron hangers securely fastened to the side walls or floor beams. Pipe hooks may be used in small frame buildings, but should not be used in buildings over three stories in height.

Material for Stacks—Cast-iron hub-and-spigot pipe is generally used for soil waste and vent stacks in buildings that do not exceed 65 feet in height. In buildings of greater height, also in small buildings where the extra cost of installation need not be considered, wrought-iron drainage systems should be installed. The recommending features of this system of piping are, greater and more uniform strength of the pipe, less number of joints, greater strength and permanence of the joints, greater range in the size of pipes and fittings and greater flexibility of the pipes and of the system as a whole.

Wrought-iron drainage systems differ from other drainage systems only in the materials of which they are constructed and the method of working the materials.

FIXTURE TRAPS

Siphon Traps—Traps are fittings used to prevent the passage of air or gas through a pipe without materially affecting the flow of sewage. To successfully perform the functions for which they are intended, traps must be so constructed or protected by vent pipes that they cannot be siphoned or have their seals forced by back pressure under any conditions that obtain in a well constructed drainage system; furthermore, they should be self-scouring at each flush of the fixture to which they are connected, and should contain sufficient depth of water to

withstand loss by evaporation for a long period of time without breaking the seal.

There are two types of fixture traps commonly used—*siphon traps* and *non-siphon traps*. The simplest type of trap is a siphon trap (Fig. 26). It consists of a downward dip in a pipe that fills with water and thus prevents the passage of air. As this water seals the pipe to the passage of air or gases, it is referred to as the seal of the trap. The seal of this form of trap is formed by the column of water *a*, and is seldom over 1¾ inches in depth. It is not a good trap for the reason that it is only capable of withstanding a back pressure of .063 pound per square inch. If greater pressure is applied the water will back up sufficiently in the horizontal inlet to allow drain air to blow through the seal as indicated. The height *b* to which water raises in the inlet end of the trap determines the amount of back pressure required to force the seal. The form of siphon trap most generally used is shown in Fig. 27. When subjected to back pressure the water in this trap backs up in the vertical inlet leg and reaches a height *b* of 3½ inches before drain air can blow through. This water column will withstand a back pressure of .126 pound per square inch, or double the back pressure a running trap will stand.

Fig. 26

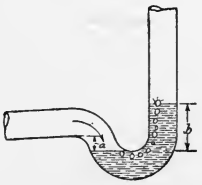

Fig. 27

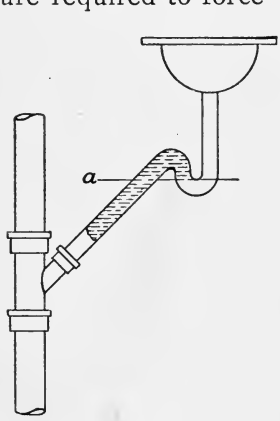

Fig. 28

Siphonage of Traps—The seal of siphon traps may be siphoned in either of two ways—first, by self-siphonage, and, second, by aspiration caused by the discharge of other fixtures.

Self-siphonage of Traps—A trap can lose its seal from self-siphonage only when the waste pipe from the trap to

the stack is unventilated and extends below the bottom level of the dip *a* of the trap so as to form the long leg of a siphon (Fig. 28). If the waste pipe extends directly back to the main stack, as shown in Fig. 29, without dipping below the bottom of the dip, the trap could not be self-siphoned because there would be no long leg, and, provided no fixtures discharged into the stack above where the waste connects, no back vents would be required for the trap.

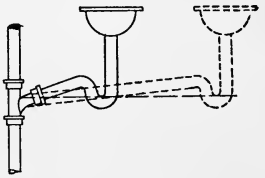

Fig. 29

Loss of Seal by Momentum—Theoretically, a trap may lose its seal by momentum. If a trap is placed directly beneath a fixture, but some distance below it, a flush of water might acquire sufficient momentum to carry it through the dip of the trap and into the waste pipe beyond. As a matter of fact, however, there are modifying conditions to prevent such loss. Most fixtures as now made have outlets so obstructed by strainers or cross-bars that the outlets are of less area than that of the waste pipe, consequently the pipe could not fill full bore and the velocity would hardly be sufficient to acquire the necessary momentum. If it did, no harm would result, as sufficient water would adhere to the long inlet pipe and to the sides of the fixture to again seal the trap. Nevertheless, traps should be placed as close to fixtures as possible, not only to prevent possible loss of seal by momentum but also to avoid a long stretch of untrapped waste pipe.

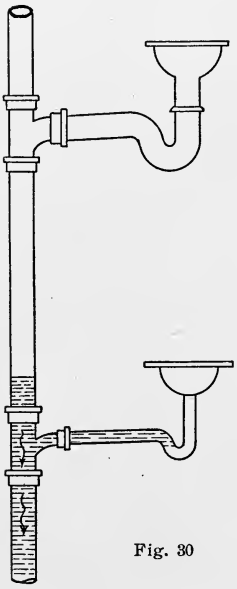

Fig. 30

Siphonage by Aspiration—When unvented siphon traps are used, a trap on one floor of a building may be siphoned by water discharged into the stack from a fixture at a

higher level, as shown in Fig. 30. This is called siphonage by Aspiration. The water discharged into the stack at the higher level, in passing the branch to the fixture at the lower level, creates a partial vacuum in the branch waste pipe that causes the water to be forced from the trap into the stack.

TRAP VENTILATION

Back-venting Traps—Siphon traps, unprotected from siphonage by vent pipes, offer no security whatsoever against the passage of drain air into a building; therefore, any system of plumbing in which siphon traps are used should be properly back-vented. A vent pipe not only protects the seal of a trap from siphonage, but also relieves the seal from back pressure and affords ventilation for the short length of waste pipe from the soil or waste stack to the fixture trap. This last consideration is of but small importance, however, because the air in branch waste pipes is changed each time the fixture it connects to is flushed. Furthermore, the air in the short lengths is kept fairly pure by diffusion with the air in the soil or waste stack.

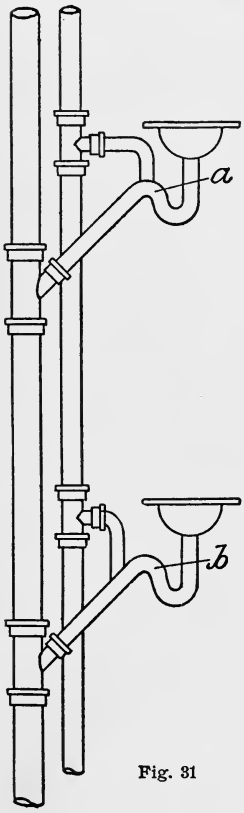

Fig. 31

Vent Connections to Traps—The usual method of back-venting fixture traps is to connect the vent pipe to the crown of the trap, as at *a*, Fig. 31. A better practice, however, is to connect the vent pipe to the waste pipe several inches away from the trap, as at *b*. When a vent pipe is connected to the crown of a trap it increases the rate of evaporation of water from the trap; also, when much grease is emptied into a fixture the vent pipe, if

connected to the crown, is liable to become entirely stopped up with the grease.*

Distance of Back-vent from Trap—The distance the back-vent can be placed from a trap without danger of the trap being siphoned depends entirely on the fall to the waste pipe from the trap to the stack. If the fall is slight, the vent pipe can connect to the waste pipe further away from the trap than when the fall is great. The rule is: Connect the back-vent to the waste pipe at such a point that the vent opening will be above the level of the water in the trap. There will then be no long unventilated leg to form a siphon. See Fig. 29.

Evaporation of Water from Traps—From experiments made by Dr. Unna, Municipal Engineer of Cologne, to determine the length of time required to destroy the seal of traps by evaporation, it can be calculated that under ordinary conditions the seal of an unvented siphon trap with a 1¾-inch depth of seal will be destroyed in from four and a half to five weeks' time. It may be stated, as a general rule applicable to all types of unvented traps, that under ordinary conditions such as obtain in a well constructed drainage system, the rate of evaporation will average .4 of an inch per week, irrespective of size or shape of the surface exposed. No experimental data is available to show the rate of evaporation of water from ventilated traps, but it would be safe to assume a rate of .8 of an inch per week.

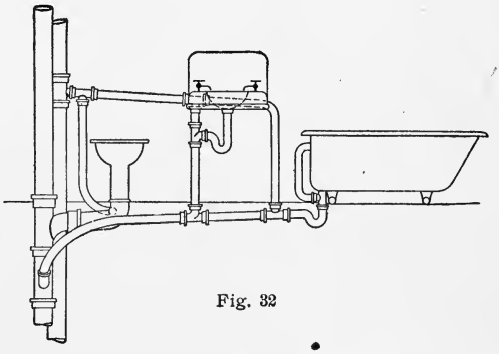

Fig. 32

* Inspector W. J. Freaney, of St. Paul, in an examination of vent pipes from fixture traps, found that out of twenty-three traps from kitchen sinks, twelve were completely obstructed with grease, ten partially obstructed, and only one perfectly clear. The latter, however, had been regularly inspected and cleaned.

Example of Back-venting — An example of back-venting the fixture traps in an ordinary bath room is shown in Fig. 32. The chief conditions to be here noted are: (1) The height of the vent pipe where it enters the vent stack. It is kept above the outlet to the highest fixture in the group so that the vent pipe cannot be used as a waste pipe by any of the fixtures in case the waste pipe becomes obstructed; (2) the vent pipe slopes from the vent stack toward the fixture traps to discharge into the waste pipes all water of condensation or any sewage that might back up in the vent pipes, should the waste pipe be obstructed; (3) the distance away from the seal of traps at which the vent pipes connect to the waste pipes. It should be further observed that the vent to the water closet does not connect to the closet trap above the floor, but to the lead bend below the floor, as a permanent and secure joint cannot be made to an earthenware closet trap. If the closet is either of the siphon jet or the wash-down type no vent will be necessary, providing fixtures do not discharge into the soil stack at a higher level, because siphonic action is necessary to operate either type of closet, and the after-wash from the flush cistern is depended upon to again seal the trap. Main-drain traps, leader traps, yard and area traps and stall drain traps do not require back-venting, because if they are emptied by siphonage their seals are soon replaced by drippings.

Non-siphon Traps are those in which the seal cannot be entirely destroyed by siphonic action under any reasonable condition of circumstances likely to prevail in a well installed drainage system. Part of the seal can be siphoned from a non-siphon trap, but sufficient water always remains to effect a seal.

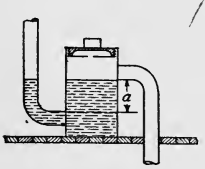

Fig. 33

Effect of Back Pressure on Trap—The most common form of a non-siphon trap is a drum trap (Fig. 33). In this form of trap the area of the body usually is four

times the area of the waste pipe, so that to force the seal by back pressure, sufficient pressure is required to sustain a column of water (*b*, Fig. 34) five times the depth of seal. The depth of seal generally is 4 inches, hence to force the seal by back pressure, a pressure sufficient to sustain a column of water 20 inches high is required. This column of water is equal to a pressure of .728 pound per square inch.

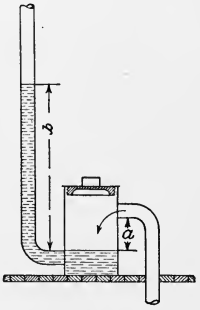

Fig. 34

The effect of siphonic action on a drum trap is shown in Fig. 35. When a partial vacuum is created in the waste pipe, atmospheric pressure forces part of the seal from the trap. When, however, the water in the trap reaches a certain level, no reasonable amount of siphonic influence can lower it more; air then breaks through the seal, dashing the water to all sides. After the vacuum is broken from all sides of the trap the water settles back in the bottom, thus maintaining the seal. Sufficient water always remains in the bottom of this form of trap to effect a perfect seal. All forms of non-siphon traps are made with enlarged bodies, some of which contain baffle plates to deflect the water from the outlet.

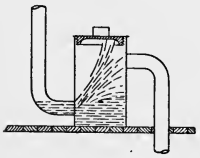
Fig. 35

Evaporation from Non-siphon Traps is not more rapid than from an equal size siphon trap, and calculated by the constant of evaporation, .4 of an inch per week, it would take, under ordinary conditions, fifty weeks for a 3-inch body drum trap with 4-inch seal and 1½-inch waste pipe to lose its seal.

Self-scouring Traps—The chief objection to non-siphon traps heretofore has been that owing to their enlarged bodies they were not self-cleaning, hence they afforded a fouling place for the deposit of sediment. This objection has been overcome as a result of the discovery that water introduced with a rotary motion into the enlarged

chamber thoroughly scoured it. A list of some of the non-siphon traps that have been tested and found satisfactory, together with a report of the tests and the conditions under which they were made, will be found in appendix.

Sizes of Fixture Traps—Traps should correspond in size and weight with the waste pipes to which they join. Other than water-closet and slop-sink traps, fixture traps need seldom be over 1½ inches in diameter, and no fixture trap need be over 3 inches in diameter.

Materials for Traps—Fixture traps are generally made of lead or brass. Lead traps should be equal to what is known in commerce as *d* pipe, and of the following average weight per linear foot.

TABLE IX—WEIGHT OF LEAD TRAPS

Diameter of Pipe in inches	1¼	1½	2	2½	3	3½	4
Weight per Linear Foot	2½	3	4	5	6	7	8

Brass traps should be of iron pipe sizes, and when connected to wrought-iron should have standard iron pipe threads. Cast brass traps should be examined to see that they possess smooth interiors, and when constructed with interior partitions they should be examined closely to see that there are no sand holes in the partition through which the water forming the seal may be lost.

COMMERCIAL TYPES OF TRAPS

Offset Siphon Trap—A common type of siphon trap is the brass trap, Fig. 36. This form of trap has many advantages, among which are the offset and slip joints, *a*, which make it adjustable.

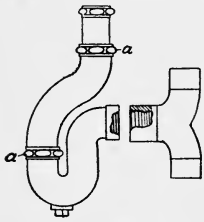

Fig. 36

The pipe outlet is threaded with a standard iron pipe thread, and may be had either male or female.

Cudell Trap—One of the oldest types

of non-siphon traps on the market is the Cudell trap, Fig. 37. Besides the large chamber that makes this type of trap non-siphoning, it contains a ball of slightly greater specific gravity than water, which rests upon a seat and forms a seal when water is not flowing through the trap. This ball prevents the seal of the trap being forced by back pressure, effects a seal in case the water is evaporated from the trap and acts as a check, by moving to the position indicated by solid lines, to prevent sewage overflowing a fixture should the drain stop up.

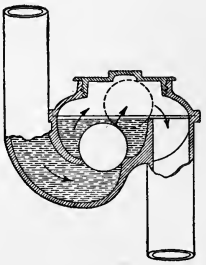

Fig. 37

Sanitas Trap—This trap, shown in Fig. 38, depends chiefly upon an inner partition or baffle plate to deflect sufficient water into the side cup to preserve the seal when the trap is subjected to siphonic action. Theoretically, inner partitions in a trap are objectionable on account of their liability to contain holes through which the water forming the seal can escape. In this case, however, the trap is so constructed that a hole in the partition would not cause it to leak, and for that reason the partition is not objectionable.

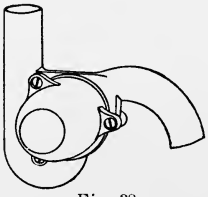

Fig. 38

Centrifugal Trap—Fig. 39 is a drum trap with the waste pipe entering the body at a tangent, so as to give the inflowing water a circular or centrifugal motion to make it self-scouring.

Sure-seal Trap—Fig. 40 is a self-scouring non-siphon trap through which the water flows with a wavy motion due to a bell-mouthed inlet and two baffle rings, *a*, *b*. This trap has an inner tube outlet, which generally is considered objectionable, but not when made of heavy seamless drawn brass tubing like in the sure-seal trap.

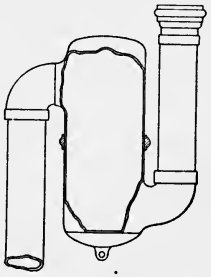

Fig. 39

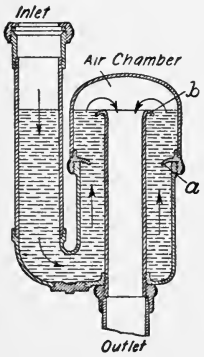

Fig. 40

Clean Sweep—This trap, Fig. 41, like the centrifugal, is non-siphoning, and is made self-cleaning by the centrifugal force of the flowing water.

EXAMPLES OF INSTALLATIONS

Connecting Several Fixtures to One Trap—When a number of wash basins are grouped together in a wash room of a factory, hotel, or other institution it is common practice to connect the waste pipes from all the basins to one trap. A better practice, however, is to trap each basin separately, Fig. 42. When but one trap is used in an installation of this kind, it leaves untrapped a large stretch of pipe, which in time becomes foul and emits disagreeable odors, that are carried into the room by local currents of air circulating in through the pipe at one basin connection and out at another basin.

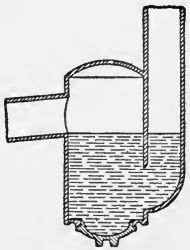
Fig. 41

Kitchen Sinks and Laundry Trays—There are conditions under which the use of one trap for two or more fixtures is permissible. In apartment buildings, where laundry trays adjoin the kitchen sink, and there is a possibility that for long periods of time the trays may not be used, it not only is permissible but perhaps better to connect the waste pipe from the trays to the house side of the sink trap below the water level, as in Fig. 43. By this arrangement a permanent seal is assured the trays whether they are used or not. The waste pipes from the trays, however, should be offset above the water

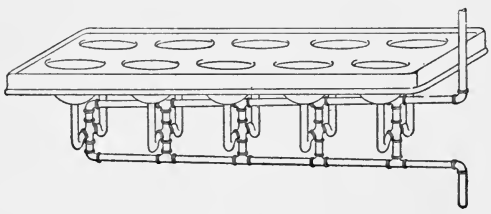
Fig. 42

level in the trap as shown, so the waste pipe will not stand full of water.

The waste pipe from the kitchen sink should never connect to a laundry-tray trap, as that would leave untrapped a greater stretch of pipe than when the conditions are reversed; besides, the untrapped pipe would soon foul from the greasy sink water passing through it, and local circulation would set up from the tub waste through the tray waste.

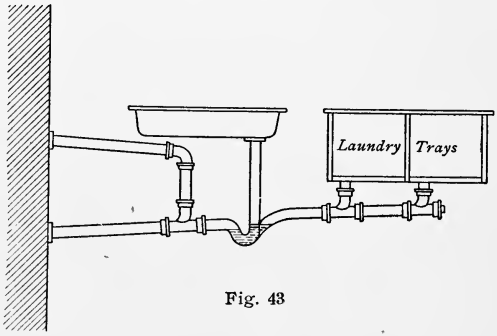

Fig. 43

Grease Traps are separators in which grease, fats and oils are separated from greasy waste water, the grease being retained in the trap while the water escapes to the drainage system. They are used in connection with kitchen, scullery or other sinks, into which large quantities of greasy water are emptied, to intercept the grease while in a fluid state and thus prevent its adhering to the waste pipes, where it would congeal and successive deposits in time choke the pipe.

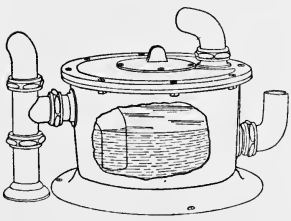
Fig. 44

Conditions Governing Use of Grease Traps—Grease traps should be used to intercept the grease from all kitchen sinks in cities that have installed systems of sewerage from which storm water is excluded. Under such conditions, the sewers are so small and so poorly flushed that great liability would exist of partial or complete stoppage from the grease if grease traps are omitted. When a city has installed a combined system of sewer and storm water drains, grease traps may be omitted

if the kitchen sink is not over fifty feet from the street sewer and the main house drain runs through the cellar exposed to the heat of a furnace. However, when the sink is over fifty feet from the street sewer, or when the main house drain is buried in the earth, so grease would be likely to chill before it reached the street sewer, grease traps should be used. Also they should in every case be used in all large institutions, boarding houses, hotels and bake shops or other buildings where large quantities of grease are liable to find their way into the drainage system.

Location for Grease Traps—A grease trap should be located as close as possible to the sink from which it receives the discharges. It should not be placed in the kitchen, however, on account of the offensive odors that would enter the room every time the trap was opened to remove the grease. In detached dwellings, grease traps usually are made of brick and placed outside the house. A better practice is to make the trap of iron and locate it in the cellar or basement, safe from frost and close to the source of grease.

Size of Grease Traps—Grease traps to be effective must have at least twice the capacity of the greatest quantity of greasy water likely to be discharged at one time into them. This is so that the entering water will be chilled and the grease congealed and rise to the surface of the water, thus being retained in the trap. If grease traps are too small, part of the entering water will pass through the outlet into the drain before it is sufficiently cooled, carrying with it whatever grease it holds in suspension, which will adhere to the pipes. In ordinary residences, a dish pan full of greasy water is the greatest quantity likely to be emptied at one time, and if the grease trap is made to hold at least twice that quantity, it will fulfill all requirements. In hotels, clubs and other large institutions where a great many people are fed, the probable amount of greasy water liable to be discharged at one time must be approximated, and the grease trap made with a capacity of twice that amount.

Types of Grease Traps—There are two types of grease traps in use: An ordinary trap with large intercepting chamber, as shown in Fig. 44, and a water jacket grease trap, Fig. 45, around which cold water circulates to chill the water in the trap. The water for this purpose is taken from the cold-water supply pipe, and must pass through the water jacket of the grease trap before being drawn from a faucet. When a water supply pipe is connected to a grease trap for this purpose, it should be continued to some unimportant fixture, or else connected to the hot-water tank, as water that passes through a grease trap jacket absorbs heat from the water within the trap and becomes disagreeably warm for most domestic uses.

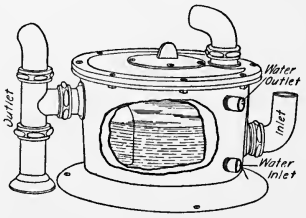

Fig. 45

BLOW-OFF TANKS FOR BOILERS

General Considerations—High pressure steam boilers should never blow off or exhaust directly into a drainage system, but should first pass through a cooling tank that will condense the steam and cool the water to a moderate temperature. When live steam is discharged directly into a drainage system the steam heats the water in traps, causing it to vaporize and emit a disagreeable odor within the building. Also, if the system is constructed of cast iron with lead calked joints the expansion and contraction of the lines will work the lead calking out of the hubs and cause the joints to leak.

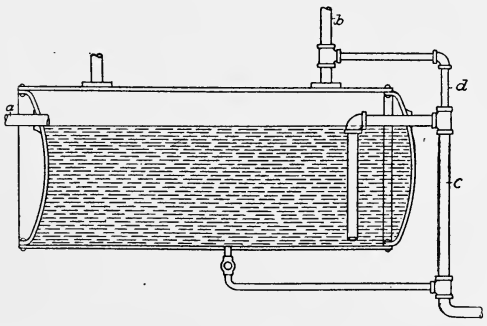

Fig. 46

Type of Blow-off Tanks—A blow-off tank and connections are shown in Fig. 46. Water enters the condensing tank from the boiler through the pipe *a*. When released from pressure, some of the water instantly flashes into steam and escapes to the atmosphere through the vapor pipe, *b*. Hot water entering the tank causes cold water from the bottom of the tank to overflow through the pipe *c*, to the house sewer outside of the main drain trap. An equalizing pipe, *d*, admits air to the overflow pipe and thus prevents the water being siphoned out of the tank.

Size of Blow-off Tanks—A blow-off tank should be large enough to hold one gauge of water from the steam boiler. In blowing off a steam boiler, one gauge of water is the most that should be blown off at one time, and if the tank is large enough to hold that quantity it will be sufficiently large for all purposes. The size of tank required can be found by multiplying the length of the steam boiler in feet by the diameter in feet and multiplying the product by one-third (4 inches being considered the depth of one gauge of water). This product will be the capacity in cubic feet of the tank required.

EXAMPLE—What capacity blow-off tank will be required for a steam boiler 18 feet long and 5 feet in diameter?

SOLUTION—$18 \times 5 \times \frac{1}{3} = 30$ cubic feet, and $30 \times 7.5 = 225$ gallons capacity.

Stock sizes of blow-off tanks can be found in the following table:

TABLE X—DIMENSIONS AND CAPACITIES OF TANKS

Capacity Cubic Feet	Capacity Gallons	Length in Feet	Diam. in Inches	Approximate Weight
33	250	6	30	500
43	325	8	30	650
53	400	10	30	800
63	475	8	36	800
80	600	10	36	950
90	700	12	36	1100
133	1000	12	42	1400
166	1250	12	48	1700

When ordering blow-off tanks the order should be accompanied by a sketch showing the location and size of the several outlets.

When several boilers are connected in battery one blow-off tank will suffice for all, provided sufficient time is allowed between blowing off the several boilers for the water in the tank to cool, or providing provision is made for replacing the hot water with cool water.

Size of Tank Outlets—Blow-off outlets to steam boilers are seldom over two inches in diameter; therefore the inlet to blow-off tanks need not be over 2 inches, iron-pipe size. The outlet, however, should be 2½ or 3 inches in diameter, so the water will enter the sewer at a slow velocity. The vapor pipe should be 2 inches in diameter, and if it extends over 100 feet should be 2½ inches in diameter.

Drips from high-pressure plants do not require a condensing tank but may connect to an atmospheric steam trap discharging into the house sewer outside of the main drain trap.

Blow-offs from low-pressure boilers need not pass through either a condensing tank or a steam trap, but may discharge freely into the house sewer outside of the main drain trap.

REFRIGERATOR WASTES

System of Piping—In apartment houses, of the better class, refrigerator waste pipes are usually installed to carry off the drip from ice boxes in the several apartments. Fig. 47 shows the general system of

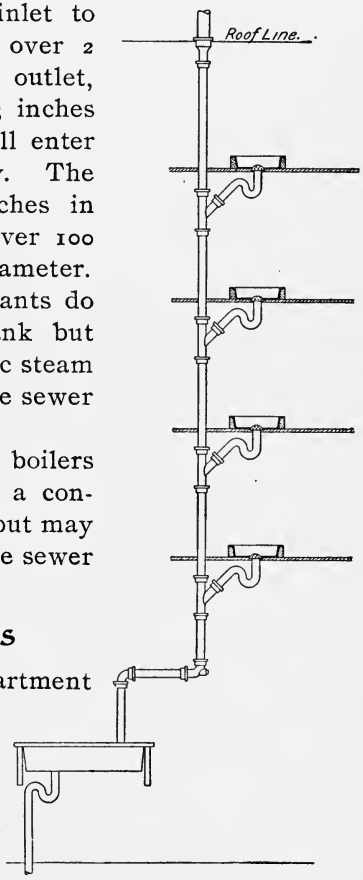

Fig. 47

piping for refrigerator wastes; the main refrigerator stack does not connect to the drainage system but discharges into a trapped and water-supplied sink in the cellar or basement, and should open to the atmosphere above the roof.

Galvanized wrought iron pipe should be used for refrigerator wastes, and the ends should be well reamed to remove the burr formed by cutting the pipe. Fittings should be of the recessed drainage type, well galvanized both inside and out. Full Y fittings should be used for branch connections to the various refrigerator safes, and a Y branch with clean-out plug should be used at all changes of direction of the horizontal mains.

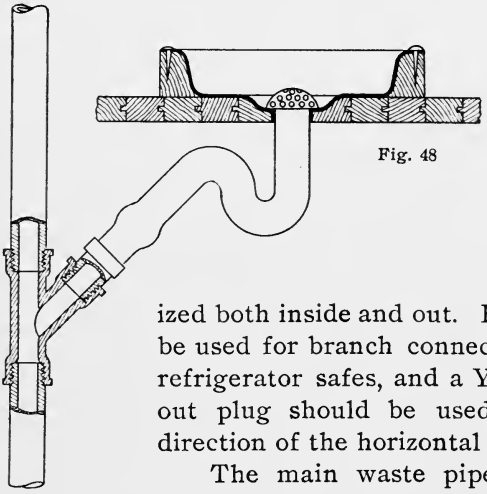

Fig. 48

The main waste pipe from refrigerators should never be less than 1¼ inches diameter, and seldom need be over 1½ inches. Branch connections to the refrigerator safes, also refrigerator wastes in private houses, need not be over 1 inch in diameter.

Refrigerator Safes—The manner of constructing and lining refrigerator safes is shown in Fig. 48. Beveled supporting strips are nailed to the floor to form a shallow pan, about 1½ inches deep, which should be made water-tight by lining with sheet lead or sheet copper. The outlet from the pan should be countersunk, and the opening protected by a removable strainer secured in place by a cross bar.

Trapping Refrigerator Safes—Each refrigerator safe should be separately and properly trapped and connected to the main refrigerator waste stack. The best type of trap to use for this purpose is a plain siphon trap of ¾ S pattern. The angle of the outlet leg of a ¾ S trap permits the slime that accumulates in the waste pipe from an ice

box to slide into the vertical stack and thence to the sink. It is not necessary to back-vent refrigerator waste traps, nor use non-siphon traps, because a flush of water of sufficient volume to siphon a trap is never discharged into a refrigerator waste; even if it were, the constant drip from the ice box would soon seal the trap again.

In private houses the refrigerator waste need only extend from the refrigerator safe to the drip sink, where it should terminate with a light swing-check valve to prevent cellar air entering the living rooms through the waste pipe. No trap is required where only one refrigerator connects to a waste, nor is it necessary in such cases to extend the pipe through the roof.

MECHANICAL DISCHARGE SYSTEMS

General Consideration—Mechanical ejectment of sewage is resorted to in cases where the street sewer is above the level of the area to be drained. This condition, however, is only found in the sub-basement floors of tall city buildings, underground public toilet rooms and underground passenger stations.

A system of mechanical ejectment consists of a gravity drainage system to a receiving tank or sump located in a water-tight pit at the lowest part of the drainage system, and a pump or compressed air ejector to raise the sewage and discharge it into the street sewer.

Systems of piping for sub-sewer drainage are the same as for gravity discharge systems, except that no main drain trap is required in sub-sewer drainage systems. Vent stacks from the sub-sewer system in tall buildings may connect to the vent stacks of the gravity system, and thus save the expense of extending them separately through the roof. In subway stations and underground toilet rooms the vent pipe should extend above the roof of the building.

The fresh air inlet should be run, and the outlet located in the same manner as for gravity systems. The point where it intersects the house drain, however, varies with the method of sewage ejectment. When pumps are

used to discharge the sewage the fresh air inlet should connect to the top of the receiving tank, where, besides serving as a fresh air inlet, it also serves as a vent to the tank when filling, and admits air when the pump is operating. When an ejector operated by compressed air is used the fresh air inlet should intersect the main house drain on the house side of the receiving pump.

Centrifugal Pump Ejectors—There are three types of apparatus used to raise sewage to the street sewer, each of which has certain features to recommend it. When the

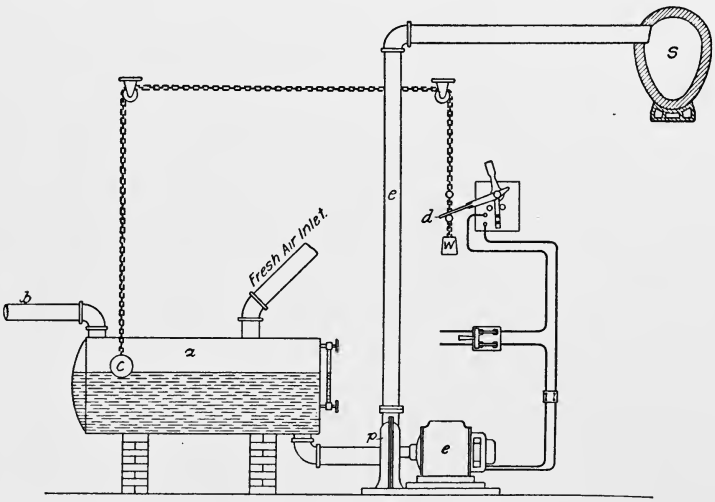

Fig. 49

volume of the sewage to be removed is large and the height to be raised is small, a centrifugal pump will give very satisfactory results. This type of pump can be driven by belting or may be operated by an electric motor directly attached to the pump shaft. By means of a float and an automatic switch an electric driven pump can be made to operate automatically, starting when the tank is filled with sewage and stopping when it is empty. The manner of installing a centrifugal pump and tank is shown in Fig. 49. With this type of ejector an ordinary steel tank is used

that may be either open or closed. The pump should be set below the level of the receiving tank, so it will remain full of water and not require priming. If placed above the level of the tank a primer will be necessary to start the pump, and this so complicates the apparatus that it is more difficult to fit up to work automatically. Where the sewage is coarse and full of solid matter, as is likely to be the case in slaughter houses or factories, a centrifugal pump will give the best results. It has few working parts to get out of order, and no parts that can choke up and thus render the pump temporarily useless; for any substance, even coal or bricks, that passes through the inlet port can easily be discharged from the outlet. Speed is an important factor in the capacity of centrifugal pumps; increasing the speed increases the capacity and also the height to which it will raise sewage, while decreasing the speed will reduce considerably the volume of sewage and the height it will be raised. The following table gives the sizes of pulleys required for pumps of different sizes, the diameters of discharge pipes, capacities per minute and revolutions per minute required to raise sewage to given heights.

TABLE XI—CAPACITIES OF CENTRIFUGAL PUMPS

Capacity per Minute	Size of Discharge Pipe	Diameter of Pulley	Revolutions per Minute									
			6 feet	8 feet	10 feet	12 feet	16 feet	20 feet	25 feet	30 feet	35 feet	40 feet
Gallons	Inches	Inches										
200	1¾	6	425	590	680	725	825	900	975	1050	1120	1170
300	2	7	400	450	525	575	650	720	780	852	908	960
650	3	7	350	400	425	450	500	550	650	775	850	910
1250	4	10	275	300	350	400	450	500	600	675	800	890
2600	6	12	200	220	240	300	360	420	490	540	580	610
4750	8	15	185	200	225	250	310	360	390	425	450	475
7500	10	18	166	188	220	245	285	320	360	386	414	436

The operation of the apparatus shown in Fig. 49 is as follows: Sewage enters the sump *a* through the house drain *b*; as the tank fills the sewage raises the float *c*, and thus by means of the chain, pulleys and weight *w*, depresses the lever *d* until it reaches a certain point when

contact is made that completes an electric circuit connected to the electric motor *e*. The current thus automatically turned on operates the electric motor that drives the pump *p*. and thus ejects the sewage from the tank through the pipe *e* to the sewer *s*. As the water line in the tank lowers, the float falls until it reaches a certain level near the bottom, when the automatic switch opens, thus breaking the electric curcuit and stopping the pump.

Piston-pump Ejectors—When the volume of sewage to be raised is small or the height it is to be elevated is great, the piston type of pump will give the best results. The sewage should be screened, however, before entering the suction pipe of this type of pump, to prevent the entrance of anything that might have been carelessly introduced into the drainage system which might interfere with or injure the working parts of the pump. Piston pumps are suitable only for comparatively clear sewage, and should not be used where coarse, insoluble materials are discharged into the drain or where chemicals are discharged that might cut the valve seats of a pump.

Piston pumps may be electrically driven or operated by steam, and may be made to operate automatically or to be started and stopped by an attendant. The manner of installing a piston pump ejector is similar to the manner of installing a centrifugal pump ejector, with the single exception that a piston pump may be located at any convenient point not over twenty-eight feet above the level of the sump. When steam is the motive power, the pump may be connected up to work automatically in the same manner as a feed-water pump and receiver.

Compressed-air Ejectors—Air ejectors are now more generally used for sewage ejectment than any other type of apparatus. They are automatic and almost noiseless in operation, are perfectly odorless, and have but few working parts that can get out of order. A type of compressed air ejector known as the Shone, is illustrated in Fig. 50. Sewage flows into the chamber *a* through the house drain *b*. As the chamber fills with sewage it raises the bucket *c*

until it reaches a certain level, when by means of the rod *d* it opens valve *e*, thus admitting compressed air to chamber *a*. The pressure of air closes the check valve *f* through which sewage entered the chamber and opens check valve *g* through which it forces the contents of the sump into the street sewer. As the sewage level in the sump falls, the bucket float, which remains full of sewage, lowers with the contents until it reaches a point near the bottom of

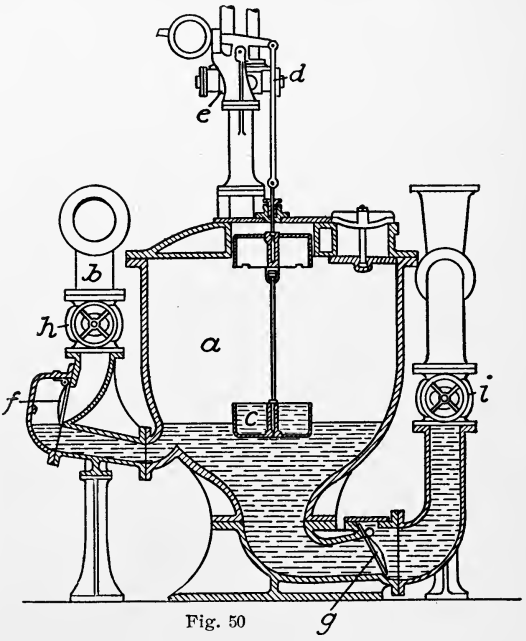

Fig. 50

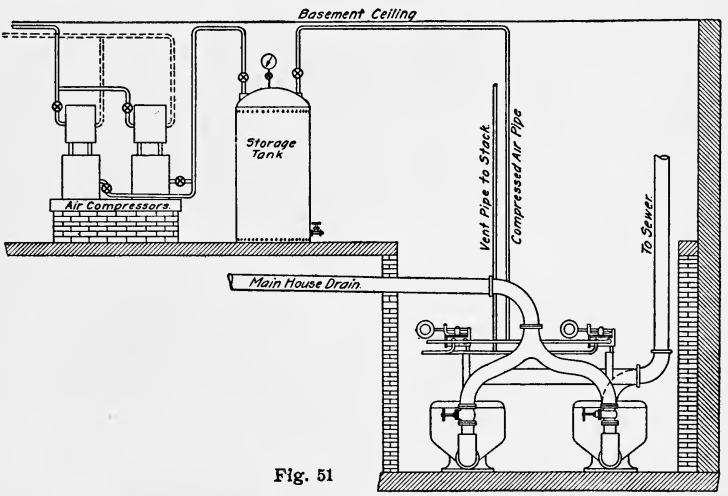

Fig. 51

LIBRARY OF THE UNIVERSITY

the chamber when it closes the air valve, thus shutting off the supply of compressed air, and at the same time opening a vent through which the confined air can escape to a vent stack. Valves *h* and *i* are placed respectively in the house drain pipe to and the discharge pipe from the tank, so that the ejector may be cut out of service at any time

Sewage ejectment apparatus should always be installed in duplicate so that either apparatus may be cut out for cleaning or repairs without interrupting the drainage service. The manner of installing a duplicate compressed air apparatus is shown in Fig. 51.

The size of sump tanks for sewage ejectment depends upon the frequency with which they are to be emptied and the probable amount of sewage to be taken care of. When operated automatically they need only be large enough to hold an hour's storage of sewage, during the hour of maximum flow. The process of emptying occupies only a few minutes when the tank is ready for service again. If the apparatus is not to be operated automatically, storage capacity for twenty-four hours should be provided. In estimating the quantity of sewage from basement floors of different classes of buildings, greater per capita allowance should be made for the basement and sub-basement floors of hotels and like institutions than from other classes of buildings.

Storage tanks for compressed air are usually made of galvanized sheet iron similar to those used for the storage of hot water. They should be equal in size to the cubical capacity of the sumps they are to discharge. When made of such a size, at least two pounds pressure of air should be maintained as working pressure for each foot in height the sewage must be raised; with greater pressure a more speedy ejectment is obtained. To operate satisfactorily with lifts of less than 7 feet, at least 15 pounds pressure of air should be maintained; 30 to 40 pounds is the pressure the average sewage ejectment plant operates under.

SUB-SOIL DRAINAGE

Where Required—In localities where the ground water is high or where an impervious strata of clay or rock causes seepage to dampen the foundation walls or wet the cellar floor, sub-soil drains are resorted to. The manner of laying a sub-soil drain is shown in Fig. 52. A line of field tile is laid around the outside of the foundation wall below the level of the foundation footings. The pipes are laid with open joints which are covered with tile collars, pieces of tar paper, excelsior, bagging, or some other coarse material that will keep out dirt until the earth settles and packs into shape. The drain should be covered for a depth of 12 to 18 inches with crushed stone and the trench then filled to within a foot of the top with loose porous materials through which water will easily percolate to the drain. The top dressing for the trench may be any kind of good loamy soil suitable for a lawn.

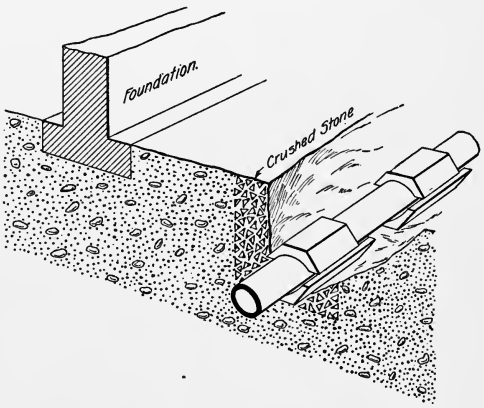

Fig. 52

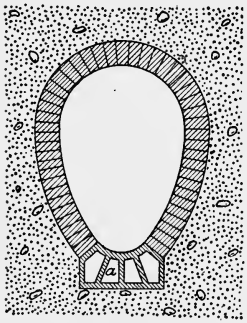

Fig. 53

Disposal of Sub-soil Water—When the street sewer is provided with a sub-sewer drain, as is usually the case in localities where the ground water is high, the proper place to dispose of sub-soil water is in the sub-sewer drain. Most brick sewers, Fig. 53, are provided with a tile invert, *a*, the channels of which serve as a sub-sewer drain; and pipe sewers in wet districts usually have a field pipe

sub-sewer drain. When, however, there is no sub-sewer drain the sub-soil water can discharge into the house sewer through a water seal and tide water trap. Some times a sub-soil drain is so far below the sewer level that sub-soil water cannot discharge into it by gravity. When such is the case, it can be gathered in a sump and discharged to the street sewer by a sewage ejectment apparatus. If, however, the volume of water is too small, and the distance it is to be raised too short to warrant installing a sewage ejectment apparatus, an automatic cellar drainer, Fig. 54, may be used. This apparatus may be operated by water, steam or air, although city water is generally used. It operates on the principle of an ejector. The drainer is placed in a pit below the level of the cellar floor, into which the sub-soil water drains. When the water reaches a certain level it raises the float *a;* this turns city water on to the apparatus, and as the water flows through the injector nozzle *b*, it entrains water from the pit which mixes with the city water in the pipe *c*, and together they are discharged into a water-supplied sink at some convenient point. When the water is discharged from the pit the float falls again, thus shutting off the flow of city water until the pit fills. This method, however, is too expensive to use for discharging large quantities of water and is not economically effective for a greater lift than 12 feet. The height to which water can be raised by a cellar drainer depends upon the available water pressure; with a pressure of 100 pounds, water can be raised 25 feet, but the amount of city water required to raise water that height makes the method too expensive for handling large quantities of water

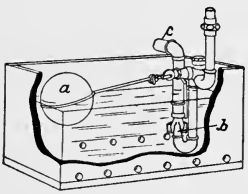

Fig. 54

TESTING DRAINAGE SYSTEMS

Methods of Testing—Two tests, a roughing test and a final test, should be applied to the drainage system in

every building. The roughing test may consist of a water test or an air test. The water test is the one most commonly used, and during warm weather is the most convenient test to apply to the roughing. It cannot, however, be applied conveniently during winter weather in cold climates, on account of the liability of the water freezing and bursting the pipes; even if the pipes are emptied the water-soaked oakum in the hubs is liable to freeze and push the lead calking from the joints.

The water test is applied by closing all openings to the drainage system, except those above the roof, and filling the system with water until it overflows the vent stacks. It is a more severe test than an air test, also a more unevenly distributed one, the bottom of all stacks and the house drain being subjected to the full hydrostatic pressure due to the head of water, while the pressure in the soil and waste stacks diminishes in intensity in proportion as it nears the top. To apply a roughing test it is necessary to close all openings to the system. Lead closet bends, and all lead pipes or traps that project from floors or walls should be closed by soldering a round disk of sheet lead over the opening. This should be done at the time of installing the lead work to prevent anything entering the drainage system and also to preserve the shape of the outlets for the walls and floors to be fitted to. Openings to wrought-iron drainage systems and wrought-iron vent pipes can be closed by means of screw plugs or capped nipples. When necessary to extend an outlet from behind a wall or

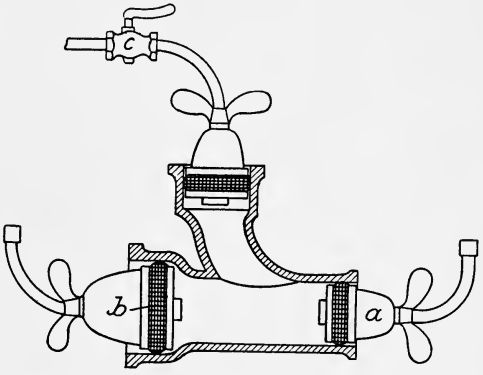

Fig. 55

partition, a capped nipple should be used. To close openings in cast-iron pipe, special plugs or stoppers must be used that can be easily removed without jarring the pipe after the system is tested.

A Testing Plug that is extensively used for closing openings to cast-iron pipe is shown in Fig. 55. It is held in place and made water tight by a rubber band under compression bearing against the inner surface of a pipe or fitting. Testing plugs of this type should be placed inside of the spigot end *a* of pipe or fitting and not in the hubs *b*, as the increased surface exposed to the pressure of water or air when placed in a hub increases the liability of the plug blowing out. These plugs are only suitable for testing systems where the head of water does not exceed 50 feet. Where plugs of this type are used, a stop cock *c* can be substituted for the cap on the end of the handle, and the system can be filled and emptied through the stop cock.

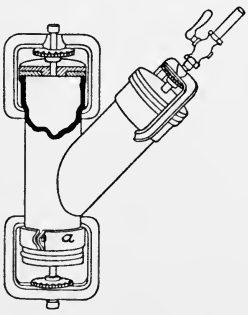

Fig. 56

A type of stopper better suited for testing high pressure work is shown in Fig. 56. This type of stopper cannot be blown off under any pressure likely to be encountered in testing drainage systems. When applied to the spigot end of a pipe this stopper must be provided with a collar *a* to hold the clamps. Stop cocks can be screwed to the capped outlets of these soil pipe plugs through which to fill and empty the system.

Sometimes it is necessary to test a drainage system in cities where tests are not usually applied and soil pipe stoppers are not to be had. Under such conditions plugs can be made by turning some soft wood, like pine or white wood, into the shape of a bung, Fig. 57, and driving them firmly into the outlets. The chief objection to this type of plug is that it must be hammered to loosen it, and the hammering jars the pipe line and might cause a leak.

Plugs for Traps—Special plugs are now made to stop the outlets to traps. Formerly it was common practice to fill the bottom of the main drain trap with Portland cement, or calk a disk of sheet lead into the drainage hub of the main drain trap. Both methods are extremely bad practice. When cement is used it is never thoroughly removed from the trap, and the portion that remains presents a rough surface that prevents the trap from self-scouring. Furthermore, in removing cement from the bottom of a trap, the bar chisel is oftentimes driven through the wall of the trap. When a trap is stopped by means of a sheet lead disk, the lead must be cut out after the system is tested, by inserting an arm through one of the vent openings in the trap and cutting the lead with a knife. Being inconvenient to get at, the lead is seldom all removed, and what remains presents a jagged edge to catch and retain anything of a fibrous nature that comes in contact with it. When a drainage system is to be tested and no trap plug is at hand, the trap can be stopped by puddling it with clay. This will hold the water of a five-story building, and can be easily and completely removed after the test. A plug for stopping traps is shown in Fig. 58. This plug is also provided with a valve for filling and emptying the drainage system, and a short length of hose through which to conduct the water to the sewer side of the trap.

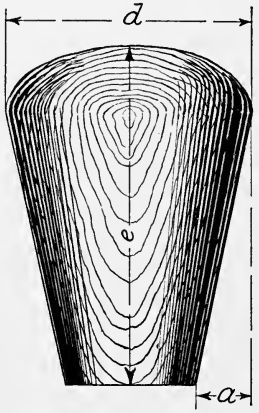

Fig. 57

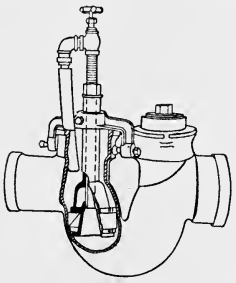
Fig. 58

When applying the water test, it is well to fill the system slowly from the bottom and make tight all joints from the house drain up. This avoids

trouble and confusion, for when a system is filled to the top, water from a small leak near the roof will follow down the stack, wetting all the hubs, and present the appearance of all the hubs leaking. However, when the system is filled to the roof, the plumber should commence at the top and work down, making each joint tight before leaving it for the one next lower down. Leaks at joints can usually be stopped by gently calking the inner and outer edge of the lead packing with a cold chisel or small calking tool and a light hammer. When split hubs or defective pipes are found, the water should be lowered beyond that point and the defective section of pipe replaced with a good one.

Testing in Sections—It is sometimes necessary to test a drainage system in sections, so as not to delay the completion of other parts of the work. When testing in sections, all parts of the drainage system should be subjected to at least one test under a hydrostatic head of ten feet or more. When a house drain is installed and is to be covered it can be tested by first extending all branches above the cellar floor level and plugging all outlets but one, into which is calked two lengths of pipe, then filling the system with water until it overflows the top length. When the soil and waste stacks are afterwards installed and tested, the entire system is filled with water, thus subjecting all parts to at least one test.

When soil, waste and vent stacks are installed first, they should be extended down below the basement ceiling, and they may then be tested separately or collectively by connecting them together with small sized wrought iron pipe. After the house drain is installed, the system should then be filled with water to at least ten feet above the highest untested joint in the vertical stacks.

A good plan to follow where testing drainage systems in buildings from four to eight stories in height, is to fill and test the work as soon as it is installed. By so doing, any serious leaks in the pipes are discovered, and if necessary to remove a defective section it can be done with

much less effort than after the stacks are through the roof and lead roughing in place. Furthermore, workmen are more careful when they have to test their own work immediately after installing it.

The drainage system in extremely tall buildings is tested in sections, so that no part of the system will be subjected to excessive pressure. This is done by leaving out a short connection of pipe between the several sections. Then, after the several sections have been tested separately, beginning at the top, they are all connected together. When the top section has been connected to the one next below it, the stack is filled with water to a height of 10 feet above the connection. This double section of pipe, after being emptied, is then connected to the section next below it, and the stack filled with water to 10 feet above the connection, as in the former case. This operation is repeated until all sections of the drainage system have been connected, and the joints of all connections subjected to a test.

Compressed Air Test—The air test is applied by closing all openings, and then forcing air into the drainage system by means of an air compressor, until there is a uniform pressure of about 10 pounds per square inch throughout the entire system. Any leakage will be indicated by the air gauge, which will show a falling pressure. This method of testing is used principally in cold climates, as it removes all possibility of damage from frost.

In warm climates the air test is seldom applied, chiefly on account of the difficulty in locating leaks. When applying an air test the first place to examine for leaks is around the testing apparatus. This being tight, the testing plugs should next be examined and made tight, after which the house drain, and then the soil waste and vent stacks should be examined. If the system leaks badly dash a bucketful of soap suds on the top of each stack in turn, and watch for bubbles as the soap suds follow down the stack. When the large leaks are located and made tight, the smaller ones can be found by daubing

soap suds on the pipes and joints with a paint brush. The pressure must be maintained within the system during the search for leaks, otherwise bubbles will not form when suds are applied to a leak.

Final Tests are applied to drainage systems after all the fixtures have been permanently set and connected and the water turned on. Care should be taken to seal the traps with water, so that the smoke or chemical used in this test cannot blow through.

There are two kinds of final tests applied to drainage systems: The peppermint test and the smoke test. The peppermint test is applied, after closing the fresh air inlet, by emptying two ounces of oil of peppermint into each stack from the roof, then pouring a gallon of boiling water into each stack to vaporize the oil—after the water is poured in, the vent stacks are plugged, and leaks sought for inside of the building by the sense of smell. When buildings are over five stories in height two additional ounces of peppermint should be used for each additional five stories in height. Oil of peppermint should not be confused with essence of peppermint, which is a weak solution of oil and water, and possesses but a fraction of the strength of oil of peppermint.

The peppermint test is very unreliable, and cannot be depended upon to indicate small leaks, as it does not create a pressure within the system.

Smoke Test—A more reliable final test is the smoke test. It is applied by pumping the system full of a dense pungent smoke under a slight pressure, by means of a smoke machine. The pressure should be only sufficient to balance a column of water one inch high. This is sufficient pressure to develop any leaks, and is not enough to force the trap seals.

WATER SUPPLY SYSTEMS

COLD WATER SUPPLY

PROPERTIES OF WATER

General Data — Pure water is a colorless, tasteless, odorless, limpid fluid, that is practically incompressible; for each atmosphere of pressure it sustains it is compressed only 47½ millionths of its bulk. It is a chemical combination of oxygen and hydrogen in the proportions of 88.9 parts by weight of oxygen to 11.1 parts of hydrogen, or 1 volume of oxygen to 2 volumes of hydrogen. Its weight varies with its temperature; at 62° F., which is taken as the average temperature, 1 cubic foot weighs 62.355 pounds.

For ordinary calculations, the weight is taken in round numbers at 62.5 pounds per cubic foot: when greater precision is required, it is taken at 62.4 pounds per cubic foot, its weight at 52.3° F.

The gallon is the unit of measure for water. One gallon of water measures .134 cubic feet, contains 231 cubic inches, and at 62° F. weighs about 8⅓ pounds. The United States gallon differs from the British or Imperial gallon, with which it should not be confused. A comparison of the American and Imperial gallon may be found in the following table:

TABLE XII—WEIGHT AND CAPACITY OF DIFFERENT STANDARD GALLONS OF WATER

	Cubic Inches in a Gallon	Weight of a Gallon in Pounds	Gallons in a Cubic Foot	Grains in a Gallon at 60° F.	Weight of a Cubic Foot of Water, English Standard Pounds Avoirdupois
Imperial or English	277.274	10.00	6.232102	70,465	62.321
United States . .	231	8.33111	7.470519	58,327	62.355

Notable Temperature—There are four notable temperatures for water, viz.:

Fahr.		Cent.	
32°	or	0°	= the freezing point under one atmosphere;
39°.1	or	4°	= the point of maximum density;
62°	or	16°.66	= the British standard temperature;
212°	or	100°	= the boiling point under one atmosphere.

The weight of one cubic foot of water at the four notable temperatures may be found in the following table:

TABLE XIII—WEIGHT OF WATER

At 32° F.	62.418 pounds
At 39°.1	62.425 pounds
At 62° (standard temperature)	62.355 pounds
At 212°	59.640 pounds

The following factors are useful for changing given quantities of water from one denomination to another:

1 cubic foot contains 1,728 cubic inches.

1 cubic foot contains 7.485 United States gallons, which, in ordinary calculations, is taken as 7.5 gallons.

Cubic feet	$\times 62.5$ = pounds
Pounds	$\div 62.5$ = cubic feet
Gallons	$\times 8.3$ = pounds
Pounds	$\div 8.3$ = gallons
Cubic feet	$\times 7.5$ = gallons
Gallons	$\div 7.5$ = cubic feet

CLASSIFICATION OF WATER

Waters for domestic uses may be divided into two general classes; *hard waters* and *soft waters*. Hard waters can be either *permanently hard*, *temporarily hard*, or both *permanently* and *temporarily hard*. By hardness of water is meant its soap destroying or neutralizing power, which is due to the presence of carbonates or sulphates of lime or magnesia. A large degree of permanent hardness indicates a bad water. Permanently hard waters contain sulphates of lime or magnesia in solution; temporarily hard waters contain carbonates of lime or magnesia in solution,

and both permanently and temporarily hard waters contain sulphates and carbonates of lime or magnesia in solution.

Hardness of water is measured in degrees (Clark-Wanklyn), and each degree of hardness corresponds to one grain of carbonate of lime or magnesia to one English gallon of water. Hardness expressed in parts per 100,000 can be converted to Clark's scale by multiplying the hardness by .7. The reason for this is Clark's scale gives the results in grains per English gallon, and there are 70,000 grains in an English or imperial gallon.

EXAMPLE—How many degrees hardness (Clark) in water that is 20 parts hard per 100,000?

SOLUTION—.7 × 20 = 14 degrees Clark.—Ans.

Conversely, hardness expressed in degrees (Clark) can be changed to parts per 100,000 by dividing the degrees of hardness by .7.

EXAMPLE—How many parts of hardness per 100,000 in water that contains 14 degrees of hardness?

SOLUTION—14 ÷ .7 = 20 parts per 100,000.—Ans.

Hardness expressed in parts per 100,000 can be changed to grains per United States gallon by multiplying the hardness by .584. The reason for this is that a United States gallon contains approximately 58,400 grains. Conversely, hardness expressed in grains per United States gallon can be changed to parts per 100,000 by dividing the grains of hardness by .584, or, where great refinement of calculation is not required, by the constant .6.

EXAMPLE—How many grains of hardness per United States gallon in water that contains 20 parts per 100,000?

SOLUTION—20 × .584 = 11.68 grains per gallon.—Ans.

EXAMPLE—How many parts of hardness per 100,000 in water that contains 11.68 grains per United States gallon?

SOLUTION—11.68 ÷ .584 = 20 parts per 100,000.—Ans.

The manner of determining the degree of hardness in water is as follows: Seventy cubic centimeters* of water

* Table for converting American and metric measures in appendix.

are placed in a clean glass bottle large enough to hold two or three times that quantity. A clear solution of soap of standard strength is then added, a little at a time, from a graduated tube, and the mixture briskly shaken. On some waters a slight lather will form at first, which will quickly disappear, or if the water is very hard a curd will form. More soap should then be added, shaking the bottle after each addition until the lather formed is sufficiently permanent to stand for five minutes. The number of cubic centimeters of soap solution added, less one, indicates the hardness of the water in degrees. The one cubic centimeter is deducted because even distilled water requires a small quantity of soap to make it lather.

TABLE XIV—HARDNESS OF WATERS

Character of the Water	Degree of Hardness (Clark-Wanklyn)	Hardness Parts per 100,000	Grains Carbonate of Lime in 1 English Gallon	Grains Carbonate of Lime in 1 United States Gallon
Very soft	1°	1.4	1	.82
Soft	2°	2.8	2	1.65
Softness decreasing	3°	4.3	3	2.51
Moderately soft	6°	8.6	6	5.
Moderately hard	8°	11.4	8	6.65
Hard	9°	13.	9	7.6
Very hard	12°	17.	12	9.9
Excessively hard	16°	23.	16	13.4
Intolerably hard above this point	17°	24.	17	14.

Standard Soap Solution is of such strength that one cubic centimeter contains sufficient soap to exactly neutralize one millogram of dissolved carbonate of lime. It is made by mixing half an ounce of finely shredded castile, or mottled soap, with two pints of methylated spirits and one pint of distilled water. The mixture should be kept at ordinary temperature, and allowed to stand for a few hours, occasionally shaking, then passed through a filter of blotting paper. Before using the solution it should be

tested by means of water of known hardness. In case the solution is too strong it should be diluted with spirits and water until the strength is just right.

Soft water contains no mineral impurities. Rain water is the purest kind of natural soft water.

The character of water, its corresponding degree of hardness and chemical substance causing the hardness, rated as equivalent to grains carbonate of lime, may be found in Table XIV.

SOLVENT POWER OF WATER

Range of Solvency—Water is an almost universal solvent. Its range is greater than any other known liquid. It dissolves to a greater or less extent all minerals, and many metals with which it is brought in contact. As a rule, the solvent power of water increases with its temperature, but for common salts the solvent power is nearly constant at all temperatures. Lime salts are more soluble in cold than in hot waters, and it is due to this latter fact that incrustation of water backs takes place in regions when the water supply is hard. In percolating through the earth the water dissolves carbonates or sulphates of lime or magnesia from lime rocks, until the water reaches the point of saturation; then, when subjected to heat in a water back or heater, the point of saturation of the water is lowered, thus liberating some of the lime or magnesia which settles upon and becomes baked to the walls of the water back or heater.

The proportion of mineral that can be dissolved by a given quantity of water depends upon the nature of the mineral, the kind of water and its temperature. The relation between soluble minerals and water is absolute. That is, at a given temperature a certain quantity of water will dissolve a definite quantity of mineral salts; if a quantity greater than this be added to the water, the amount in excess will settle to the bottom of the vessel. The water is then saturated, and the mixture is a saturated solution. By increasing or decreasing the temperature of the water,

as the nature of the mineral requires, a greater quantity can be dissolved.

The greatest quantity of various substances in common use that can be dissolved by one imperial gallon of water can be found in the following table. The figures do not indicate the weight of chemical contained in a gallon of saturated solution.

TABLE XV—SOLUBILITY OF WATER
(COLLETT)

One Imperial Gallon of Pure Water can Dissolve of Substance	At 60 Degrees Fahrenheit	At 212 Degrees Fahrenheit
Alum (potash alum)	0.95 pound	35.7 pounds
Aluminum sulphate	3.3 pounds	8.9 pounds
Ammonium oxalate	0.45 pound	4.08 pounds
Barium chloride	3.5 pounds	6.0 pounds
Barium hydrate	0.5 pound	1.0 pound
*Calcium carbonate	2.5 grains	1.5 grains
Calcium chloride	40.0 pounds	Unlimited
Calcium hydrate	93.0 grains	53.6 grains
Calcium nitrate	40.0 pounds	Unlimited
Calcium oxide (lime)	70.0 grains	40.5 grains
†Calcium sulphate	161.0 grains	152.0 grains
Ferrous sulphate	2.0 pounds	17.8 pounds
*Magnesium carbonate	Doubtful	1.5 grains
‡Magnesium chloride	20.0 pounds	40.0 pounds
Magnesium hydrate	2.0 grains	2.0 grains
Magnesium oxide	1.4 grains	1.4 grains
Magnesium sulphate	3.0 pounds	13.0 pounds
Sodium biborate (borax)	0.4 pound	5.5 pounds
Sodium carbonate (dry)	1.2 pounds	4.5 pounds
Sodium carbonate (crystals)	4.1 pounds	14.0 pounds
Sodium chloride	3.5 pounds	4.0 pounds
Sodium hydrate	6.1 pounds	Unlimited
Sodium hyposulphite	5.0 pounds	20.0 pounds
Sodium phosphate	1.2 pounds	
Sodium sulphite	2.5 pounds	10.0 pounds
Sodium sulphate	1.1 pounds	4.2 pounds

* Insoluble at about 290 degrees Fahrenheit.
† Decomposes at boiler temperatures in presence of alkaline earths or iron.
‡ Insoluble at 302 degrees Fahrenheit, equal to 70 pounds steam pressure.

Effect of Waters Upon Metals—The solvent power of water is not confined to minerals alone, but, under favorable conditions, will attack and dissolve metal from water pipes or from other metallic surfaces with which it comes in contact. The energy with which water attacks metals

depends largely upon the character of the water, the nature of the metal and the amount of free carbonic acid contained in the water. As a rule, soft water attacks and dissolves metals to a greater extent than will hard water, although there are exceptional cases where permanently hard waters have been known to attack lead pipes with an energy equal to that of soft waters. It is not sufficient that water be soft to cause it to attack metals; there must also be present in the water some oxygen and carbonic acid, either free or in solution. If either the oxygen or the carbonic acid are lacking, the solvent power of the water will be greatly reduced.

Effect of Water Upon Lead—Water containing a fixed amount of oxygen and a varying amount of carbonic acid acts upon lead with an energy proportional to the amount of carbonic acid present. The action of water upon a bright lead surface is much more energetic than upon a dull lead surface. Thus, city rain water, stored for 3½ months in contact with new and old lead surfaces, was found to contain in suspension and solution the following amount of lead.

*Stored in old lead, 3.65 parts per million
Stored in new lead, 58.10 parts per million

The importance of this will be realized when it is known that 0.5 part of lead per million is considered by most authorities the danger limit.

At Lowell, Mass.,† the water from a well that caused a serious outbreak of lead poisoning was found, upon analysis, to be heavily charged with carbonic acid and to contain 2.30 parts of lead per million.

Hard waters generally protect lead pipe by depositing on the inner surface an insoluble coating. As a rule, the harder the water, as compared with the free carbonic acid, the less effect the water has upon the lead. Ground water is generally more energetic than surface water in its action upon lead, although surface water is more liable to

* Mason Water Supply, page 398.
† Massachusetts State Board of Health Report, 1900, page 488.

become contaminated with sewage, in which case the resultant carbonic acid would make it more dangerous than ground water.

An idea of the amount of lead dissolved from lead pipes by different kinds of water can be found in tables XVI, XVII, XVIII. In these tables the quantity of lead dissolved is stated in parts per 100,000, in which amounts .05 part of lead is considered the danger limit.

TABLE XVI—LEAD FOUND IN DRINKING WATER

LIST OF CITIES AND TOWNS WITH MAXIMUM AMOUNTS OF LEAD FOUND IN SAMPLES OF WATER TAKEN DURING ORDINARY USE AND AFTER STANDING IN THE PIPE

LOCALITY	Lead Parts per 100,000 (.05 parts of lead per 100,000, dangerous)	
	During Ordinary Use	After Standing in Pipe
Amesbury	.0029	0.0043
Andover	.0171	0.0571
Attleborough	.1714	0.1371
Beverly	.0257	0.0314
Bridgewater	.0086	0.0171
Brookline	.0114	0.0286
Cambridge	.0086	0.0114
Cohasset	.0086	0.0086
Dedham	.0100	0.0200
Franklin	.0286	0.1143
Grafton	.0229	0.0457
Hyde Park (old wells)	.0457	0.4571
Hyde Park (new wells)	.0200	0.0457
Lawrence	.0371	0.1829
Lowell (boulevard wells)	.0800	0.4000
Lowell (cook and hydraulic wells)	.5143	0.4643
Marblehead	.0086	0.0143
Metropolitan supply	.0400	0.1371
Middleborough	.3429	1.1429
Needham	.0171	0.0429
Newton	.0714	0.1714
North Attleborough	.0071	0.0329
Norwood	.0043	0.1371
Webster	.0200	0.0571
Wellesley	.0152	0.0314
Weymouth	.0800	0.2286
Woburn	.0229	0.0343

(Report Massachusetts Board of Health, 1900, page 490.)

These tables all show the increased amount of lead dissolved from pipes by water that was standing for some time, and indicate the additional protection to health that can be obtained by allowing the water in the service pipe to run to waste before drawing any for cooking or drinking purposes.

TABLE XVII — LEAD IN SAMPLES OF GROUND WATERS, ARRANGED ACCORDING TO AVERAGE AMOUNT OF LEAD FOUND WHEN WATER IS IN ORDINARY USE.

(PARTS PER 100,000—.05 PART PER 100,000, DANGEROUS.)

LOCALITY	SAMPLES TAKEN	Lead (Average)	Average Length of Pipe (Feet)	Average Size of Pipe (Inches)	Free $C. O_2$	Hardness
Lowell (cook and hydraulic wells)	In ordinary use	.1608	79	¾	3.287	3.5
	After standing in pipe	.2535				
Middleborough	In ordinary use	.1549	123	¾	4.148	2.6
	After standing in pipe	.6171				
Attleborough	In ordinary use	.0697	95	1	3.242	1.7
	After standing in pipe	.0905				
Newton	In ordinary use	.0432	179	¾	1.187	2.2
	After standing in pipe	.0908				
Hyde Park (old wells)	In ordinary use	.0400	43	¾	3.243	4.6
	After standing in pipe	.3029				
Lowell (boulevard wells)	In ordinary use	.0202	62	¾	1.301	1.5
	After standing in pipe	.0861				
Grafton	In ordinary use	.0187	265	⅞	1.912	3.2
	After standing in pipe	.0329				
Hyde Park (new wells)	In ordinary use	.0172	32	¾	2.733	2 9
	After standing in pipe	.0329				
Wellesley	In ordinary use	.0101	98	¾	1.092	2.3
	After standing in pipe	.0219				
Webster	In ordinary use	.0100	76	¾	1.689	0.8
	After standing in pipe	.0286				
Needham	In ordinary use	.0091	112	¾	2.392	2.1
	After standing in pipe	.0269				
Dedham	In ordinary use	.0082	230	¾	1.611	4.1
	After standing in pipe	.0150				
Brookline	In ordinary use	.0074	461	¾	1.149	4.7
	After standing in pipe	.0197				
Bridgewater	In ordinary use	.0057	127	¾	1.084	2.6
	After standing in pipe	.0143				
North Attleborough	In ordinary use	.0049	144	¾	1.529	2.9
	After standing in pipe	.0226				
Cohasset	In ordinary use	.0048	39	1	2.411	6 3
	After standing in pipe	.0043				

(Report Massachusetts State Board of Health, 1900, page 491.)

Effect of Galvanized Pipe upon Water—Zinc coatings on the surface of galvanized iron pipe are attacked and dissolved by some waters almost as energetically as is lead pipe. Zinc is also dissolved to a considerable extent from brass pipes. At Cwmfelin,* in Wales, galvanized iron

* *Chemical News* X—X—'85.

pipe that conducts water from a spring to the town, a distance of one-half mile, was found to change the character of the water as shown by the following analysis:

	At Spring	At Delivery
Free ammonia	none	114
Nitrogen as nitrates	.8	none
Total residue	154.3	270
Zinc carbonate	none	91.6

TABLE XVIII—LEAD IN SAMPLES OF SURFACE WATERS, ARRANGED ACCORDING TO AVERAGE AMOUNT OF LEAD FOUND WHEN WATER IS IN ORDINARY USE.

(PARTS PER 100,000—.05 PART PER 100,000, DANGEROUS.)

LOCALITY	SAMPLES TAKEN	Lead (Average)	Average Length of Pipe (Feet)	Average Size of Pipe (Inches)	Free $C. O._2$	Hardness
Lawrence	In ordinary use	.0543	104	¾	1.100	1.6
	After standing in pipe	.0704				
Weymouth	In ordinary use	.0314	109	¾	0.152	0.3
	After standing in pipe	.1167				
Metropolitan supply	In ordinary use	.0111	85	¾	1.105	1.3
	After standing in pipe	.0293				
Andover	In ordinary use	.0108	122	¾	0.119	1.0
	After standing in pipe	.0257				
Beverly	In ordinary use	.0087	84	¾	0.121	2.3
	After standing in pipe	.0147				
Cambridge	In ordinary use	.0025	58	¾	1.225	2.7
	After standing in pipe	.0064				

(Report Massachusetts State Board of Health, 1900, page 491.)

The effect on ground and surface waters that are conducted through galvanized iron and brass service pipes can be judged from the results in Tables XIX, XX, XXI and XXII.

To briefly sum up, it may be stated that it is always better to determine experimentally the action of water upon pipes than to try and predict it from a knowledge of the character of the water. It is better still to only use pipes that are not affected to any appreciable extent by the solvent action of any water. If, however, pipes must be used that are so affected, then those should be selected, the dissolved metals of which are the least injurious to the human system.

The necessity of using pipes that are not injurious is manifest, when it is considered that a water which is

perfectly wholesome and non-solvent may be changed at any time for a different supply that might energetically

TABLE XIX—ZINC IN SAMPLES OF GROUND WATER.
(PARTS PER 100,000.)

LOCALITY	SAMPLES TAKEN	Zinc (Average)	Average Length of Pipe (Feet)	Average Size of Pipe (Inches)
West Berlin	In ordinary use	1.8469	Galv. Iron 4,000	..
	After standing in pipe	.....		
Millbury	In ordinary use	.3084	53	¾
	After standing in pipe	.7931		
Newton	In ordinary use	.1254	74	¾
	After standing in pipe	.5551		
Marblehead	In ordinary use	.0857	65	⅝
	After standing in pipe	.4914		
Grafton	In ordinary use	.0733	117	¾
	After standing in pipe	.3257		
Lowell (cook and hydraulic wells)	In ordinary use	.....	Brass 40	¾
	After standing in pipe	.2867		
Wellesley	In ordinary use	.0686	60	¾
	After standing in pipe	.2257		
Fairhaven	In ordinary use	.0527	..	..
	After standing in pipe	.6686		
Lowell (boulevard wells)	In ordinary use	.0338	90	1⅛
	After standing in pipe	.1522		
Webster	In ordinary use	.0286	Galv. Iron 100	½
	After standing in pipe	.3628		
Reading	In ordinary use	.0000	40	..
	After standing in pipe	.0000		
Warren	In ordinary use	.0000	Galv. Iron Cistern	..
	After standing in pipe	.0000		

(Report Massachusetts State Board of Health, 1900, page 495.)

attack the pipes, or, the character of the water itself might change sufficiently to dissolve the metal.

Copper is also dissolved from brass pipes, as may be seen from the following tables of analysis of ground and surface waters drawn from brass service pipes.

TABLE XX—ZINC IN SAMPLES OF SURFACE WATER.
(PARTS PER 100,000.)

LOCALITY	SAMPLES TAKEN	Zinc (Average)	Average Length of Pipe (Feet)	Average Size of Pipe (Inches)
Sheffield	In ordinary use	.8657	Galv. Iron 246	¾
	After standing in pipe	.....		
Palmer	In ordinary use	.2900	..	..
	After standing in pipe	.4280		
Beverly	In ordinary use	.2714	1,128	2
	After standing in pipe	.....		
Fall River	In ordinary use	.0070	49	⅝
	After standing in pipe	.0103		
Metropolitan supply	In ordinary use	.0000	Brass 92	1
	After standing in pipe	.0000		

(Report Massachusetts State Board of Health, 1900, page 495)

The effect of some water upon different metals of which water pipes are made or coated, and the resultant effect upon the health of those drinking the waters are shown in Table XXIII.

TABLE XXI—COPPER IN SAMPLES OF GROUND WATER
(PARTS PER 100,000.)

LOCALITY	SAMPLES TAKEN	Copper (Average)	Average Length of Brass Pipe (Feet)	Average Size of Pipe (Inches)
Wellesley	In ordinary use	.0257	60	¾
	After standing in pipe	.0286		
Lowell (boulevard wells)	In ordinary use	.0076	90	1 ⅛
	After standing in pipe	.0233		
Lowell (cook and hydraulic wells)	In ordinary use	.....	40	¾
	After standing in pipe	.0000		

TABLE XXII—COPPER IN SAMPLES OF SURFACE WATER
(PARTS PER 100,000.)

LOCALITY	SAMPLES TAKEN	Copper (Average)	Average Length of Brass Pipe (Feet)	Average Size of Pipe (Inches)
Malden	In ordinary use	.0000	20	⅝
	After standing in pipe	.0470		
Metropolitan supply	In ordinary use	.0050	92	1
	After standing in pipe	.0000		
Lawrence	In ordinary use	0000	10	¾
	After standing in pipe	.0000		
Wakefield	In ordinary use	.....	6	½
	After standing in pipe	.0000		

TABLE XXIII—EFFECT OF METALS ON HEALTH

Kind of Pipe	Action of Water	Effect upon People
Lead pipe	Dissolves lead	Dangerous
Tin or tin lined lead	No effect	No effect
Galvanized iron	Dissolves zinc	Injurious
Tin lined iron	No effect	No effect
Brass pipe	Slightly dissolves copper and zinc	Objectionable
* Plain iron	Rusts and dissolves	Objectionable
Aluminum	No effect	No effect
Nickel	No effect	No effect
Benedict nickel	No effect	No effect

The action of water upon galvanized iron pipes is almost as energetic as upon lead pipes, and under suitable conditions will dissolve equal amounts of metal from each. However, the effect of the zinc upon the health is not

* Dissolved iron or rust in small quantities is not injurious to health, but ¼ grain of iron per gallon of water imparts an objectionable taste to the water besides making it unfit for washing and for most manufacturing purposes.

dangerous but only injurious, because zinc is not a cumulative poison, and so long as the initial dose is not sufficient to cause illness or death, the effect is soon thrown off without apparent injury. Lead, on the contrary, even when taken in small doses, remains in the system until sufficient poison accumulates to cause serious illness or death, or if the initial dose is of sufficient strength the effect may be immediately fatal.

Lead pipes are more extensively used than any other kind of pipes for water supply in buildings. Sheet lead also is extensively used for lining water tanks. Within the past few years, however, a rational decrease in the use of lead supply pipes and lead lined tanks is noticeable. Galvanized iron pipes, which are cheaper and better in every way, are fast supplanting lead pipes, and when perfect security from metal poisoning is desired, Benedict nickel seamless tubing, tin-lined lead, or tin-lined iron pipes may be used. From a hygienic standpoint, Benedict nickel and tin-lined pipes are about equal, but when superior finish is desired the Benedict nickel tubing will be found the more satisfactory. In appearance it is equal to nickel-plated brass pipe, and in all other respects superior to it.

Absorption of Gases by Water—Water has a certain affinity for most gases. This affinity is more pronounced for some gases than for others; for instance, at atmospheric pressure and at ordinary temperatures, pure water will absorb 4 per cent. of its own volume of air, 4 per cent. of its volume of sulphureted hydrogen, or 100 per cent. of its volume of carbonic acid gas. By increasing the pressure on the water its capacity for absorption is increased in direct proportion. That is, if the pressure be increased to two atmospheres, the temperature remaining unchanged, pure water will absorb 8 per cent. of its own volume of air, 8 per cent. of its volume of sulphureted hydrogen or 200 per cent. of its volume of carbonic acid gas.

Heating water lessens its capacity for absorption in direct proportion to the amount of heat applied. The relative volume of gas absorbed is in all cases directly as

the pressure and inversely as the temperature. Thus, if the pressure be increased it will absorb more gas, and if it be heated it will absorb correspondingly less gas. Water is saturated when it has in solution all the gas it can hold. If water is saturated with gas and the pressure is then increased or the temperature lowered, the capacity of the water to hold gas will be increased and it will absorb still more. If water is saturated with gas and the pressure is reduced or its temperature raised, the capacity of the water to hold gas will be reduced and some will be liberated.

It is due to the fact that increasing the pressure of water increases its capacity to absorb gases that necessitates frequent recharging of air chambers in pipe systems. Water usually enters a supply system from a pump or reservoir at atmospheric pressure, saturated with air. As the water becomes compressed, however, its capacity to absorb air is increased, hence, when passing an air chamber the water absorbs air from the chamber, which in turn gradually fills with water.

The fact that decrease of pressure liberates air from saturated waters determines the best place in a system to locate air chambers. When a faucet is opened the pressure of water at that point is considerably reduced; furthermore, in passing through the system of piping within the building the water has become slightly warmed; hence, if an air chamber is located immediately above the faucet, gases liberated from the water will rise into the air chamber and keep it charged.

HYDRODYNAMICS

HYDROSTATICS

LAWS OF HYDRAULIC PRESSURE

The Hydraulic Gradient—The surface of water at rest is always level. If two or more vessels are connected together near their bottoms and water is poured into one vessel, it will flow through the connecting pipes to the several vessels until the surface of water in all of them is at the same level.

If water in the system of piping, Fig. 59, be at rest, it

will stand in all of the branches open to the atmosphere at the top at the same level *d* as the water in the tank. This line is called the *hydrostatic gradient.* If the cock *b* be now opened the water in the several branches will fall to the imaginary line *c* drawn from the surface of the water in the tank to the outlet of the cock. This line is known as the *hydraulic gradient*, and its distance above a pressure main determines the available pressure head at that point, when water is flowing through the pipe. It should be noticed that the *pressure head* differs from the *hydrostatic head;* the latter is equal to the vertical distance from the water pipe to the hydrostatic gradient *d*, while the pressure head is equal to only the vertical distance from the water pipe to the hydraulic gradient *c*. When water from one tank or reservoir discharges into another tank or reservoir at a lower level, the hydrostatic gradient becomes an imaginary line drawn from the surface of water in the upper tank or reservoir to the surface of water in the lower one. An open conduit between two such reservoirs will conduct water from the higher to the lower one without overflowing the conduit, provided the conduit follows the line of the hydraulic gradient and at no point rises above nor dips below it. When running siphon pipes or other closed conduits from a reservoir or other source of water supply to a building, care should be taken to keep the pipe below the hydraulic gradient. When, however, it is impracticable to do so, a relief valve or open vent should be provided at the highest point of the line where it rises above the hydraulic grade. If means are not provided to permit the escape of air from the pipe, it will

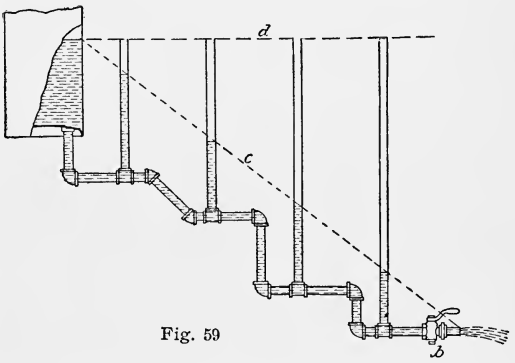

Fig. 59

accumulate at this point until it fills the bend of the pipe and by forming an air lock might completely stop the flow of water. If the flow of water is not completely stopped, other important changes will result; if a vacuum gauge is attached to the pipe at any point where it rises above the hydraulic gradient it will show a partial vacuum; this vacuum will cause air to collect at the highest point in the pipe and the flow of water will become broken until finally the pipe will be filled only to the point where it rises above the hydraulic gradient and will discharge at this point as though discharging into the air. From the highest point to the outlet, the pipe will be only partly filled and will act as a flume or channel to carry off the water.

Pressure of Water—The unit of water pressure is the pound per square inch. The pressure exerted by water is due to its weight and is determined by the height of the column of water. For instance, if the pressure exerted by a force pump is 50 pounds per square inch it will balance a column of water about 115 feet high. This pressure, therefore, is equivalent to a head of water 115 feet deep. Head of water at a given point is the vertical distance between that point and the level of the surface of the water. In measuring the depth or static head of water, the vertical distance from the hydrostatic gradient to the point of consideration is always taken regardless of lateral or horizontal distances from the point.

The weight of a column of water one inch square and 12 inches high equals .434 pound. It is just $\frac{1}{144}$ the weight of one cubic foot of water which has the same depth of column but 144 times the area. When the height of a column of water is known, its pressure in pounds per square inch can be determined by multiplying the height in feet by *.434, the weight of one foot of water 1 inch square.

* The constant .434 will be found sufficiently accurate for most calculations and when an approximation only is required the constant .4 will suffice.

EXAMPLE—What is the pressure per square inch at the base of a column of water 200 feet high?

SOLUTION—$200 \times .434 = 86.8$ pounds per square inch.

When the pressure is known the height or head of a column of water can be found by multiplying the pressure in pounds by 2.3, the height of a column of water weighing one pound.

EXAMPLE—What must be the height of a column of water to exert a pressure of 86.8 pounds per square inch?

SOLUTION—$86.8 \times 2.3 = 199.64$ feet head.

The constants .434 and 2.3 although used in practice are not exactly correct as can be seen by comparing the two foregoing examples.

Heads and corresponding pressures of water in pounds per square inch for every foot in height to 240 feet can be found in Table XXIV.

Pascil's Law of Pressure—Water confined in a vessel and subjected to a pressure, transmits the pressure with the same intensity in all directions. This law was first discovered by Pascil, and is expressed as follows: "The pressure per unit of area exerted anywhere upon a mass of liquid is transmitted undiminished in all directions, and acts with the same force upon all surfaces, in a direction at right angles to the surfaces."

Measuring Pressure—The pressure of water in closed systems is indicated by a pressure gauge. The construction of a pressure gauge is shown in Fig. 60. In this illustration the dial face is removed to show the interior construction. A bent tube *a*, of elliptical cross-section, made of metal of the required elasticity, has its bottom end firmly attached to the gauge case, and its upper end left free to move. To the upper end is attached a lever *b*, which is so connected to a pointer in front of a graduated index dial that any movement of the tube will be indicated by the pointer.

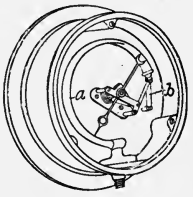

Fig. 60

The principle of its operation is as follows: If a bent

tube of elliptical cross section be subjected to an internal pressure, the force exerted will tend to straighten the tube. This is due to the fact that a force exerted within a tube of elliptical cross section tends to make it take a circular

TABLE XXIV—HEADS AND PRESSURES OF WATER

Feet Head	Pressure per Square Inch	Feet Head	Pressure per Square Inch	Feet Head	Pressure per Square Inch	Feet Head	Pressure per Square Inch	Feet Head	Pressure per Square Inch
1	0.43	49	21.22	97	42.01	145	62.81	193	83.60
2	0.86	50	21.65	98	42.45	146	63.24	194	84.03
3	1.30	51	22.09	99	42.88	147	63.67	195	84.47
4	1.73	52	22.52	100	43.31	148	64.10	196	84.90
5	2.16	53	22.95	101	43.75	149	64.54	197	85.33
6	2.59	54	23.39	102	44.18	150	64.97	198	85.76
7	3.03	55	23.82	103	44.61	151	65.40	199	86.20
8	3.46	56	24.26	104	45.05	152	65.84	200	86.63
9	3.89	57	24.69	105	45.48	153	66.27	201	87.07
10	4.33	58	25.12	106	45.91	154	66.70	202	87.50
11	4.76	59	25.55	107	46.34	155	67.14	203	87.93
12	5.20	60	25.99	108	46.78	156	67.57	204	88.36
13	5.63	61	26.42	109	47.21	157	68.00	205	88.80
14	6.06	62	26.89	110	47.64	158	68.43	206	89.23
15	6.49	63	27.29	111	48.08	159	68.87	207	89.66
16	6.93	64	27.72	112	48.51	160	69.31	208	90.10
17	7.36	65	28.15	113	48.94	161	69.74	209	90.53
18	7.79	66	28.58	114	49.38	162	70.17	210	90.96
19	8.22	67	29.02	115	49.81	163	70.61	211	91.39
20	8.66	68	29.45	116	50.24	164	71.04	212	91.83
21	9.09	69	29.88	117	50.68	165	71.47	213	92.26
22	9.53	70	30.32	118	51.11	166	71.91	214	92.69
23	9.96	71	30.75	119	51.54	167	72.34	215	93.13
24	10.39	72	31.18	120	51.98	168	72.77	216	93.56
25	10.82	73	31.62	121	52.41	169	73.20	217	93.99
26	11.26	74	32.05	122	52.84	170	73.64	218	94.43
27	11.69	75	32.48	123	53.28	171	74.07	219	94.86
28	12.12	76	32.92	124	53.71	172	74.50	220	95.30
29	12.55	77	33.35	125	54.15	173	74.94	221	95.73
30	12.99	78	33.78	126	54.58	174	75.37	222	96.16
31	13.42	79	34.21	127	55.01	175	75.80	223	96.60
32	13.86	80	34.65	128	55.44	176	76.23	224	97.03
33	14.29	81	35.08	129	55.88	177	76.67	225	97.46
34	14.72	82	35.52	130	56.31	178	77.10	226	97.90
35	15.16	83	35.95	131	56.74	179	77.53	227	98.33
36	15.59	84	36.39	132	57.18	180	77.97	228	98.76
37	16.02	85	36.82	133	57.61	181	78.40	229	99.20
38	16.45	86	37.25	134	58.04	182	78.84	230	99.63
39	16.89	87	37.68	135	58.48	183	79.27	231	100.06
40	17.32	88	38.12	136	58.91	184	79.70	232	100.49
41	17.75	89	38.55	137	59.34	185	80.14	233	100.93
42	18.19	90	38.98	138	59.77	186	80.57	234	101.36
43	18.62	91	39.42	139	60.21	187	81.00	235	101.79
44	19.05	92	39.85	140	60.64	188	81.43	236	102.23
45	19.49	93	40.28	141	61.07	189	81.87	237	102.66
46	19.92	94	40.72	142	61.51	190	82.30	238	103.09
47	20.35	95	41.15	143	61.94	191	82.73	239	103.53
48	20.79	96	41.58	144	62.37	192	83.17	240	103.96

form; to do so, the inner arc of the bent tube must lengthen and the outer arc shorten and the combined effort will straighten the tube in direct proportion to the pressure exerted. The straightening of the tube imparts a movement to the register hand which indicates on the face of the gauge the intensity of the pressure.

CALIFORNIA

HYDRAULICS

FLOW OF WATER THROUGH PIPES—FRICTION IN PIPES

The flow of water through pipes is accelerated by gravity and retarded by friction. If it were not for the frictional resistance in pipes water would flow through them with a velocity equal to eight times the square root of the head. As it is, the roughness of the interior walls, the bends and branch fittings in a system of piping offer so much frictional resistance that the actual mean velocity is but a fraction of the theoretical velocity.

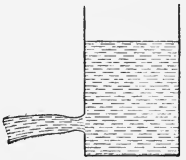

Fig. 61

The pressure head at any point is less than that due to the hydrostatic head. This difference between the hydrostatic head and the pressure head is known as *loss of head*, and is greater the smaller the pipe or the greater the velocity of flow. The loss of head is due to three causes—loss of head due to entry, loss of head due to bends, and loss of head due to the length and area of the pipe.

LOSS OF HEAD DUE TO ENTRY

The Contracted Vein—The flow of water through a circular aperture in a thin plate, Fig. 61, is contracted in size a short distance outside of the plate to .615 the area of the aperture, but expands again to the full size of the opening. The point of greatest contraction is at a distance from the plate equal to about one-half the diameter of the aperture.

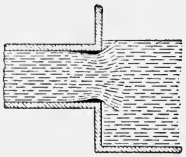

Fig. 62

In consequence of this contraction, the velocity of flow is slightly reduced from the theoretical velocity and the quantity discharged is greatly reduced. This contraction is known as the *contracted vein*.

When the aperture is through a plate of considerable thickness or through a tube the length of which is not less than twice the diameter of the pipe, the contraction is still found to occur but to a lesser extent than in the

former case; the vein being contracted, as shown in Fig. 62, to only .8 of the theoretical area due to head and aperture.

Loss due to the contracted entrance of water from a tank or cylinder into the end of a pipe, as commonly found in practice, must be taken then as .2 the quantity that should pass. This loss is known as loss of head due to entry and is considered separate from the loss due to friction in long pipes, loss for bends, branches, etc., and should be added thereto.

The actual loss of head due to entry can be reduced to a quantity too small to be considered by enlarging the entrance to the pipe and making it cone shaped as in Fig. 63. The cone should have a length *a*, equal to one-half the diameter of the pipe, and a radius *b* equal to 1.22 diameters of the pipe. Any greater enlargement of the opening will deduct but little from the loss of head. If the ends of thick pipes or pipes of small diameter which are relatively thick are reamed with a reamer, the length of which is just twice the base, enough metal will be removed to give almost the best form of contracted vein.

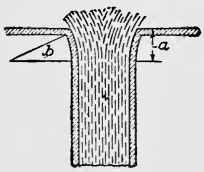

Fig. 63

When an unreamed pipe projects a short distance inside of a tank the loss of head due to entry is greater than when the pipe finishes flush with the inside of the tank. This loss of head has been found by experiment to be over .3 of the whole flow, thus decreasing it one-tenth more than a pipe that finishes flush with the inside of a tank.

Loss of head due to entry can be determined by the formula:

$$l = c\frac{v^2}{2g}.$$

When l=loss of head in feet;
v=velocity of flow in feet per second
g=32.16, acceleration due to gravity
c=coefficient depending on shape of the pipe inlet.

For ordinary calculations the value of *c* may be taken as .5.

EXAMPLE—What is the loss of head due to entry in a pipe when the velocity of flow is 8 feet per second?

SOLUTION—$l=.5\frac{64}{64.32}=.497$ feet. Answer.

Loss of Head in Bends—The loss of head, due to bends in a pipe, depends upon three factors. First, loss due to change of direction of the water in the pipe; second, loss from friction as in an ordinary straight length of pipe; third, loss due to enlargements or contractions in the bend, such as are formed when the unreamed ends of pipe are screwed into ordinary elbows.

The second and third losses also apply to couplings and tees, and the loss is about the same as for bends of equal diameters. The loss of head for change of direction differs with the angle and with the radius of the bend. That is, there is less loss for change of direction in a 45 degree bend than in a 90 degree bend, and the loss is greater in a bend of one diameter radius than in one with a radius of two diameters. The loss in a 90 degree bend with a radius of five or more diameters and uniform smooth interior bore is no greater than in an equal length of straight pipe. In other words, there is practically no loss for change of direction in a bend of greater radius than 5 diameters.

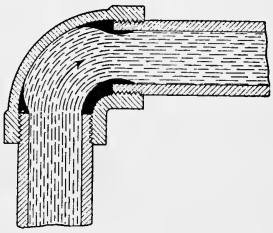

Fig. 64

The head lost in a 90 degree bend of less than 5 inch diameter and of the radius commonly found in practice (Radius=Diameter) with square unreamed ends of pipe screwed into the fitting, Fig. 64, is found by experiment to equal the head lost in a length of pipe of about 100 times the diameter of the fitting.* The loss of head is divided into:

Loss of head due to change of direction	38 diameters
Loss of head for entry with ordinary unreamed ends . .	58 diameters
Loss of head from friction due to length	4 diameters
Total	100 diameters

*Thus 100 diameters of 2-inch pipe=200 inches of straight 2-inch pipe.

In pipes of larger diameter than 5 inches, these values would hold true only for the loss of head due to change of direction, as the pipes are not relatively as thick, nor the enlargements of the elbows relatively as great.

The loss of head when the ends of the pipe screwed into the fitting are reamed, as shown in Fig. 65, is found by experiment to be equal to the loss of head in a pipe equal in length to about 50 diameters of the fitting. This loss of head is divided into:

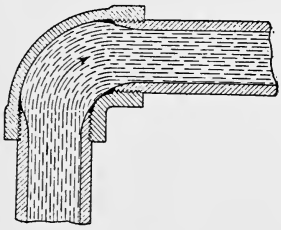

Fig. 65

Loss of head due to change in direction	38 diameters
Loss of head due to enlargement of the bend	8 diameters
Loss of head from friction due to length of fitting	4 diameters
Total	50 diameters

The loss of head in a bend of five or more diameter radius, with flush interior joints, Fig. 66, is equal to the loss of head in a length of pipe four diameters of the fitting. This is comparatively shown as follows:

Loss of head due to change of direction	0 diameters
Loss of head due to enlargements of the bend	0 diameters
Loss of head from friction due to length of pipe	4 diameters
Total	4

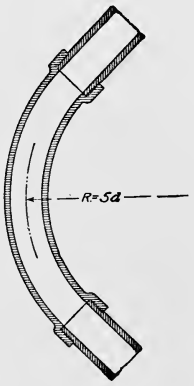

Fig. 66

From the foregoing it will be seen that the least possible head is consumed by using fittings of large radius with flush joints. That when common fittings are used the loss can be reduced to one-half by reaming the ends of the pipe with a triangular-shaped reamer, the length of which is just double the base.

TABLE XXV—VALUES OF COEFFICIENT n

$\frac{r}{R}=$	R=r	R=1.12 r	R=1.25 r	R=1.4 r	R=1.6 r	R=2 r	R=2.5 r	R=3.3 r	R=5 r
n	1.98	1.41	.98	.66	.44	.29	.21	.16	.14

The loss of head due to bends can be calculated by the formula:

$$h=n\frac{v^2}{2g}$$

In which h=head lost in feet
v=velocity in feet per second
g=32.16 acceleration due to gravity
n=a coefficient for the bend.

The value of coefficient n depends upon the ratio between the radius r of the pipe and the radius R of the bend. Table XXV gives values of n corresponding to various values of the ratio $\frac{r}{R}$.

EXAMPLE—What will be the loss of head in a column of water flowing with a velocity of 8 feet per second through a 4-inch bend that has a radius R of 4 inches?

SOLUTION—The radius r of a 4-inch bend = 2 inches, therefore, R which is 4 inches will=2r which gives for n the value .29 (Table XXV). Substituting values in the formula then gives, $h=.29\times\frac{64}{64.32}=.287$ foot Answer.

Loss of Head in Straight Pipes—Loss of head in straight pipes is caused entirely by the frictional resistance of the walls of the pipes; the rougher the walls, the greater the amount of frictional resistance offered to the flow. Frictional resistance in pipes may be summed up in three general laws, viz.:

LAW I—Frictional resistance in a pipe varies directly as the length of the pipe. That is, the total amount of friction offered in a pipe 100 feet long is twice as much as in a pipe 50 feet long, of equal diameter and smoothness, and one-half as much as in a pipe 200 feet long.

LAW II—Friction varies inversely as the diameter of the pipes. That is, in a pipe 2 inches in diameter the frictional resistance is proportionately less by one-half than in a pipe 1 inch in diameter. The reason is that frictional resistance is in direct proportion to the area of the surface of water and walls of pipe in contact. This surface is known as the wetted perimeter, and in a pipe 2 inches in diameter is but twice as great as the surface in a 1-inch pipe, while the cross sectional area of the 2-inch pipe, it will be remembered, is 4 times as great as that of a 1-inch pipe.

This is well illustrated in Fig. 67. In the four 1-inch pipes, *a*, *b*, *c*, *d*, the length of the wetted perimeter is just 13.16 inches. If the four 1-inch pipes be now converted into one 2-inch pipe by removing the sections marked with dotted lines and rolling the heavy lined sections back to *e*, the wetted perimeter will be reduced to 6.49 inches, or about one-half the length of the combined perimeters of the four 1-inch pipes, while the sectional area remains unchanged.

Law III—Friction varies almost as the square of the velocity and is entirely independent of pressure. That is, if the velocity of flow of water in a pipe is doubled, the frictional resistance will be quadrupled, while if the initial velocity is reduced to one-half, the frictional resistance will be decreased to one quarter, regardless of the intensity of pressure in the pipe.

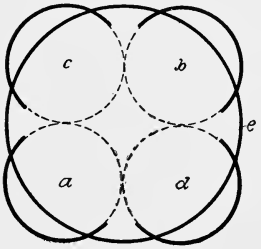

Fig. 67

Loss of head due to friction in pipes can be determined by the formula:

$$h = f \frac{l v^2}{d\ 2\ g}$$

In which h=loss of head in feet;
f=coefficient for size and roughness of pipe
l=length of pipe in feet
v=velocity in feet per second
d=diameter of pipe in feet
g=32.16 acceleration due to gravity

Table XXVI—Values of Coefficient *f*
(Merriman)

Diameter of Pipe in		Velocity of Feet per Second						
Ft.	In.	1	2	3	4	6	10	15
.05	⅝	.047	.041	.037	.034	.031	.029	.028
.1	1¼	.038	.032	.030	.028	.026	.024	.023
.25	3	.032	.028	.026	.025	.024	.022	.021
.5	6	.028	.026	.025	.023	.022	.021	.019
.75	9	.026	.025	.024	.022	.021	.019	.018
1.	12	.025	.024	.023	.022	.020	.018	.017

The value of coefficient *f* for different sizes of pipes

and with different velocities of flow can be found in Table XXVI.

EXAMPLE—What is the loss of head due to friction in a 3-inch pipe 600 feet long, if the mean velocity of flow is 4 feet per second?

SOLUTION—From the table it is found that the value of f for a 3-inch pipe with a velocity of 4 feet per second is .025; then, substituting given values in the formula:

$$h = .025 \times \frac{600 \times 16}{.25 \times 64.32} = 15 \text{ feet.—Answer.}$$

Table XXVII gives the loss of head in pounds per square inch for each 100 feet of length in different sizes of clean pipes discharging given quantities of water per minute.

TABLE XXVII—LOSS OF HEAD IN POUNDS

(G. A. ELLIS, C. E.)

Gallons Discharged per Minute	½-inch		¾-inch		1-inch		1¼-inch		1½-inch		2-inch		2½-inch		3-inch		4-inch		6-inch		Gallons Discharged per Minute
	Velocity in Pipe per Second	Friction Loss in Pounds	Velocity in Pipe per Second	Friction Loss in Pounds	Velocity in Pipe per Second	Friction Loss in Pounds	Velocity in Pipe per Second	Friction Loss in Pounds	Velocity in Pipe per Second	Friction Loss in Pounds	Velocity in Pipe per Second	Friction Loss in Pounds	Velocity in Pipe per Second	Friction Loss in Pounds	Velocity in Pipe per Second	Friction Loss in Pounds	Velocity in Pipe per Second	Friction Loss in Pounds	Velocity in Pipe per Second	Friction Loss in Pounds	
5	8.17	24.6	3.63	3.3	2.04	0.84	1.31	0.31	0.91	0.12	.....	.....	.....	.....	.....	.....	.....	.....	.....	.....	5
10	16.3	96.0	7.25	13.0	4.08	3.16	2.61	1.05	1.82	0.47	1.02	0.12	.....	.....	.....	.....	.....	.....	.....	.....	10
15	.....	.....	10.9	28.7	6.13	6.98	3.92	2.38	2.73	0.97	.....	.....	.....	.....	.....	.....	.....	.....	.....	.....	15
20	.....	.....	14.5	50.4	8.17	12.3	5.22	4.07	3.63	1.66	2.04	0.42	.....	.....	.....	.....	.....	.....	.....	.....	20
25	.....	.....	18.1	78.0	10.2	19.0	6.53	6.40	4.54	2.62	.....	.....	1.63	0.21	1.13	0.10	.....	.....	.....	.....	25
30	.....	.....	.....	.....	12.3	27.5	7.84	9.15	5.45	3.75	3.06	0.61	.....	.....	.....	.....	.....	.....	.....	.....	30
35	.....	.....	.....	.....	14.3	37.0	9.14	12.4	6.36	5.05	.....	.....	.....	.....	.....	.....	.....	.....	.....	.....	35
40	.....	.....	.....	.....	16.3	48.0	10.4	16.1	7.26	6.52	4.09	1.60	.....	.....	.....	.....	.....	.....	.....	.....	40
45	.....	.....	.....	.....	.....	.....	11.7	20.2	8.17	8.15	.....	.....	.....	.....	.....	.....	.....	.....	.....	.....	45
50	.....	.....	.....	.....	.....	.....	13.1	24.9	9.08	10.0	5.11	2.44	3.26	0.81	2.27	0.35	1.28	0.09	.....	.....	50
75	.....	.....	.....	.....	.....	.....	19.6	56.1	13.6	22.4	7.66	5.32	4.90	1.80	3.40	0.74	.....	.....	.....	.....	75
100	.....	.....	.....	.....	.....	.....	.....	.....	18.2	39.0	10.2	9.46	6.53	3.20	4.54	1.31	2.55	0.33	1.13	0.05	100
125	.....	.....	.....	.....	.....	.....	.....	.....	.....	.....	12.8	14.0	8.16	4.89	5.67	1.99	.....	.....	.....	.....	125
150	.....	.....	.....	.....	.....	.....	.....	.....	.....	.....	15.3	21.2	9.80	7.00	6.81	2.85	3.83	0.69	1.70	0.10	150
175	.....	.....	.....	.....	.....	.....	.....	.....	.....	.....	17.1	28.1	11.4	9.46	7.94	3.85	.....	.....	.....	.....	175
200	.....	.....	.....	.....	.....	.....	.....	.....	.....	.....	20.4	37.5	13.1	12.48	9.08	5.02	5.11	1.22	2.27	0.17	200
250	.....	.....	.....	.....	.....	.....	.....	.....	.....	.....	.....	.....	16.3	19.66	11.3	7.76	6.39	1.89	2.84	0.26	250
300	.....	.....	.....	.....	.....	.....	.....	.....	.....	.....	.....	.....	19.6	28.06	13.6	11.2	7.66	2.66	3.40	0.37	300
350	.....	.....	.....	.....	.....	.....	.....	.....	.....	.....	.....	.....	.....	.....	15.9	15.2	8.94	3.65	3.97	0.50	350
400	.....	.....	.....	.....	.....	.....	.....	.....	.....	.....	.....	.....	.....	.....	18.2	19.5	10.2	4.73	4.54	0.65	400
450	.....	.....	.....	.....	.....	.....	.....	.....	.....	.....	.....	.....	.....	.....	20.4	25.0	11.5	6.01	5.11	0.81	450
500	.....	.....	.....	.....	.....	.....	.....	.....	.....	.....	.....	.....	.....	.....	22.7	30.8	12.8	7.43	5.67	0.96	500

If the loss of head is desired for the same diameters of pipe but for different lengths than those given in the table, when discharging the given quantities of water, they can be found by multiplying the loss of head by the ratio of the length of pipe. For instance, according to the table there is a loss of head of 13 pounds in a ¾-inch pipe when

discharging 10 gallons of water per minute, and, as friction, hence loss of head, is in direct proportion to the length of a pipe, velocity and diameter remaining the same, it follows that in a ¾-inch pipe 200 feet long, discharging 10 gallons of water per minute, the loss of head would be 26 pounds or double that in 100 feet of pipe. Likewise, in a pipe of equal diameter but only 50 feet long, discharging 10 gallons of water per minute, the loss of head would be 6.5 pounds or one-half that of 100 feet of pipe.

If the loss of head expressed in pounds in Table XXVII is desired in feet, it can be found by multiplying the loss of head in pounds by 2.3. The size of pipes and quantity of discharge being given in this table, the velocity of flow can be found by dividing the quantity by the area of the pipe.

Friction loss in pounds pressure per square inch for each 100 feet of length in different size clean iron pipes, discharging given quantities of water per minute, also velocity of flow in pipe in feet per second, can be found in Table XXVII.

FLOW OF WATER THROUGH PIPES

FORMULAS

Velocity of Flow—When water flows through a pipe of uniform cross section, the quantity of water passing any point in a given interval of time depends upon the velocity with which the water flows and the area of cross section of the pipe. It is evident that the quantity of water will equal a column whose cross section is the area of the pipe and whose length is equal to the velocity.

The velocity with which water moves through a pipe is not uniform throughout its cross section. It is least near the wetted perimeter of the pipe where the friction of the pipe retards the flow, and is greatest at the center of the cross section where having to overcome only the friction of its own flowing layers, it attains the maximum velocity. It is assumed in practice, however, that all particles of the water have the same velocity, and the mean of all the velocities in the cross section is taken as the velocity of flow.

Formulas for Velocity—When the size of a pipe and the quantity of water it will discharge in a given time are known, the mean velocity of efflux can be found by the formula:

$$V = \frac{q}{a}.$$

In which V = velocity of flow in feet per minute
q = quantity of water in cubic feet per minute
a = area of cross section of pipe in square feet.*

EXAMPLE — What must be the velocity of flow in a 2-inch pipe to discharge 6.3 cubic feet of water per minute?

SOLUTION—Area of pipe = .0213 square feet. Then $6.3 \div .0213 =$ 300 feet per minute.— Answer.

When the hydrostatic head, length and diameter of a pipe are known, the mean velocity of discharge can be found by the formula:

$$V = m\sqrt{\frac{hd}{1 + 54d}}$$

In which V = mean velocity in feet per second
m = coefficient from Table XXVIII
d = diameter of pipe in feet
h = hydrostatic head in feet
l = total length of pipe in feet

TABLE XXVIII—VALUES OF COEFFICIENT *m*

$\sqrt{\frac{hd}{1+54d}}$	Diameter of Pipe in							
	Feet .05	Feet .10	Feet .50	Feet 1	Feet 1.5	Feet 2	Feet 3	Feet 4
	Ins 5/8	Ins. 1¼	Ins. 6	Ins. 12	Ins. 18	Ins. 24	Ins. 36	Ins. 48
	m	m	m	m	m	m	m	m
.005	29	31	33	35	37	40	44	47
.01	34	35	37	39	42	45	49	53
.02	39	40	42	45	49	52	56	59
.03	41	43	47	50	54	57	60	63
.05	44	47	52	54	56	60	64	67
.10	47	50	54	56	58	62	66	70
.20	48	51	55	58	60	64	67	70

EXAMPLE—What will be the velocity of discharge from a 6-inch pipe 500 feet long under a head of 60 feet?

*Table of square inches in decimals of a square foot in appendix.

SOLUTION—$v = 55\sqrt{\frac{60\times.5}{500+(54\times.5)}} = 55\sqrt{\frac{30}{527}} = 55\sqrt{.0567} = 55 \times .238 = 13.09$ feet per second. Answer.

In column 1 of Table XXVIII will be found that the nearest value corresponding to .238 is .20, and following that line to where it intersects the column headed 6 inches, the value of coefficient *m* will be found to be 55, which multiplied by the square root .238 gives the velocity sought for. Where great accuracy of calculation is not required, the constant 48, which is an average value of coefficients for small sizes of pipes, can be used, and will give results sufficiently accurate for most practical purposes.

Formula for Head—When the length and diameter of a pipe are known, the head required to discharge a certain quantity of water per second can be found by the formula:

$$h = \frac{.000704\ q^2\ l}{d^5}$$

In which h=head in feet
l=length of pipe in feet
d=diameter of pipe in feet
q=quantity of water in cubic feet per second.

EXAMPLE—What head will be required to discharge from a 4-inch pipe 500 feet long 2 cubic feet of water per second?

SOLUTION—Substituting values in the formula

$$h = \frac{0.000704\times4\times500}{0.00422} = 333 \text{ feet head. Answer.}$$

Formula for Diameter—When the length of a pipe, the hydrostatic head, and the quantity of water required to be delivered per second are known, the diameter of pipe that will safely take care of that quantity can be found by the formula:

$$d = .234\sqrt[5]{\frac{q^2\ l}{h}}$$

In which d=diameter of pipe in feet
q=cubic feet per second to be delivered
l=length of pipe in feet
h=head in feet

EXAMPLE—What diameter of pipe will be required to deliver .5 cubic foot of water per second through a pipe 2,000 feet long with a head of 400 feet?

SOLUTION—$d=.234\sqrt[5]{\frac{.25\times2,000}{400}}=.245$ feet=3-inch pipe. Answer.

Formulas for Quantity—When the mean velocity and the area of a pipe are known, the quantity of water discharged in a given interval of time can be determined by the formula:

$$q=va$$

In which q=quantity of water in cubic feet per minute
v=velocity of flow in feet per minute
a=area of cross section of pipe in square feet

EXAMPLE—How many cubic feet of water will be discharged per minute by a 2-inch pipe when the velocity of efflux is 300 feet per minute?

SOLUTION—Area of 2-inch pipe=.021 square feet. Then $.021\times300=6.3$ cubic feet. Answer.

When the diameter, head and length of a pipe are known, the quantity of water it will deliver in a given time can be found by the formula:

$$q=\sqrt{\frac{d^5\ h}{l}}\times4.71$$

In which q=quantity in cubic feet per minute
d=diameter of pipe in inches
h=head in feet
l=length of pipe in feet

EXAMPLE—What quantity of water can be delivered per minute through a 3-inch pipe 2,000 feet long with a head of 400 feet?

SOLUTION—$q=\sqrt{\frac{243\times400}{2,000}}\times4.71=32.97$ cubic feet per minute. Answer.

The velocity of flow in drains or pipes running partly full can be found by the formula:

$$V=\sqrt{\frac{a}{p}2d}$$

In which V=velocity in feet per second
a=area of water in square feet
P=wetted perimeter in feet
2d=twice the slope in feet per mile

EXAMPLE—What is the velocity of flow in a 6-inch drain laid at a grade of ¼ inch per foot when running half full?

SOLUTION—There is a 110-foot fall in a mile of drain laid at a grade of ¼ inch per foot. Then

$$V=\sqrt{\frac{.098}{.75}\times 220}=5.3 \text{ feet per second. Answer.}$$

MEASUREMENT OF WATER
TYPES OF WATER METERS
VELOCITY METERS

Classification—The quantity of water flowing uninterruptedly through a pipe may be approximately determined either by calculation or by measurement. When the flow of water is intermittent, however, the quantity can be determined only by measurement. The manner of determining the flow of water by calculation has already been explained. It is measured by means of an apparatus called a water meter.

Water meters may be divided into two general classes: Velocity or inferential meters, and volume or positive meters. Velocity meters measure the velocity of water passing through them, and, the size of the discharge orifice remaining constant, the velocity per foot equals a certain quantity which is automatically computed and indicated on an index dial. Volume meters measure the volume of water passing through them and automatically register the quantity on an index dial; they operate by alternately filling and discharging a chamber of known capacity.

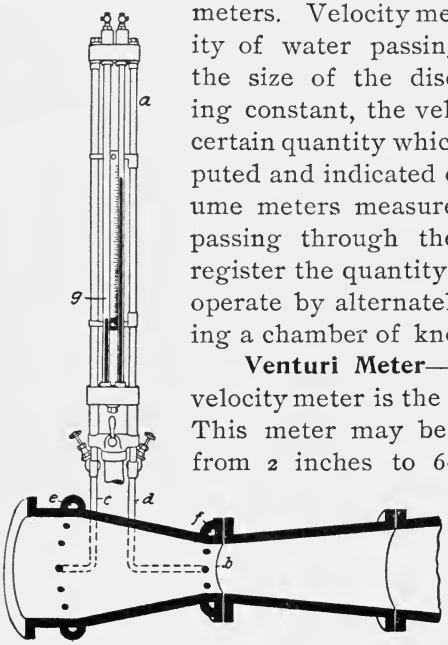

Fig. 68

Venturi Meter—The simplest form of velocity meter is the Venturi meter, Fig. 68. This meter may be had in sizes ranging from 2 inches to 60 inches in diameter, and fitted with an index dial, a recording register, or with a manometer gauge, *a*, which simply indicates the rate of

flow. The meter operates on the principle that when water flows through a contraction in a tube of the shape and relative cross sections of a Venturi meter tube, there is a temporary reduction of pressure at the throat *b*, which is approximately proportional to the square of the velocity. This reduction of pressure at the throat causes an unequal pressure in the pressure pipes *c* and *d*, which are connected respectively to the pressure chamber *e* on the inlet end of the tube and the pressure chamber *f* at the throat of the tube. This unequal pressure depresses the mercury in the leg *g* of the manometer and causes it to rise correspondingly in the other leg; a properly graduated scale showing the difference between these two mercury levels, indicates the velocity of flow through the meter. Having the velocity of flow and knowing the area of cross section of the meter, the quantity of water passing through in a given time can be calculated by multiplying the velocity for that period of time by the cross sectional area of the meter tube.

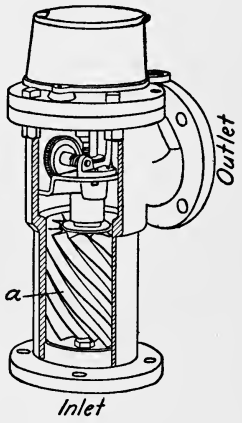

Fig. 69

The Gem Meter, Fig. 69, clearly illustrates the construction and principle of operation of a mechanical type of velocity meter. Water enters the cylinder from below and in rising presses against the propeller blades *a*, causing them to revolve in direct proportion to the velocity of the water flowing through the meter. The speed of the propeller is so adjusted that a certain number of revolutions equals a certain number of gallons or cubic feet which are automatically indicated on an index dial.

VOLUME METERS

The Hersey Disk Meter, Fig. 70, discharges a known quantity of water at each gyration of the disk *a*, and is therefore a positive or volume meter. The principle of its operation is as follows: Water entering the meter passes

through a perforated metal screen *b* to remove all coarse particles of matter that might interfere with the operation of the meter. The water enters the disk chamber on top of the disk *a* and exerts a pressure there at the same time that the pressure is released in the discharge chamber. This uneven pressure causes the disk to gyrate, rising on the inlet side and lowering on the discharge side, so that water now enters and presses on the under side of the disk which again gyrates and brings the pressure to the upper side of the disk. The disk is thus alternately raised and lowered at the inlet and outlet ports at each gyration of the disk as long as water is flowing through the pipe.

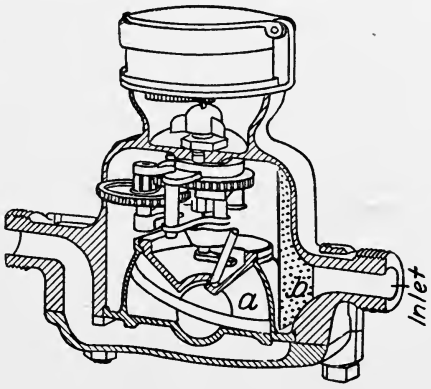

Fig. 70

At each gyration of the disk an amount of water equal to the entire contents of the disk cylinder is discharged and each gyration indicates on the index dial the amount of water that passes through the meter.

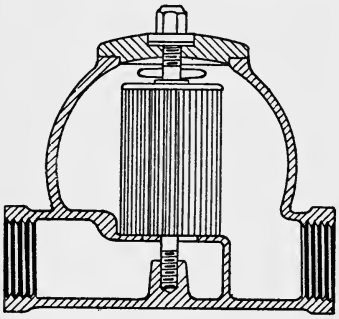
Fig. 71

METER ACCESSORIES

Fish Traps—In localities where the water supply is obtained from rivers, lakes, reservoirs or other surface sources, fish traps should be used to prevent the introduction of fish, algæ, weeds or objects that might interfere with the operation of the meter. Some meters have a strainer covering the inlet and forming part of the meter. Such a strainer is shown at *b*, in Fig. 70.

When a strainer does not form part of the meter, a separate strainer or fish trap should be used. In localities where the water is extremely dirty or carries large quantities of matter in suspension, a strainer, Fig. 71, formed of hinged brass strips, will be found more satisfactory than a perforated strainer, Fig. 72, owing to the ease with which the hinged strainer can be removed and cleaned.

Water meters should be located in an accessible place safe from frost; where there is danger of hot water being forced backward through a meter a check valve should be placed in the supply pipe to protect the indurated rubber parts from being damaged by the hot water.

Special water meters, the working parts of which are made of bronze metal, are made for metering hot water. Venturi tube meters have no parts that can be affected by the action of hot water, and may also be used for that purpose.

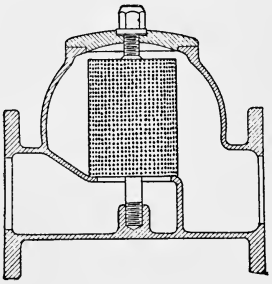

Fig. 72

WATER HAMMER

If a column of water flowing through a pipe has its momentum suddenly arrested by closing a valve, the momentum of the moving water will produce an impulse upon the valve, and also upon the sides of the pipe. This impulse is called *water hammer*.

If the water were inflexible and incompressible as a bar of steel, the force of the impact would equal the weight of the column of water times the square of the velocity divided by twice the acceleration due to the force of gravity and would affect only the gate of the valve. As the water is flexible and slightly compressible, it exerts a pressure of equal intensity upon the sides of the pipe as well, which yields to the pressure and thus absorbs some of the energy of the moving column. The water, too, yielding to the pressure, slightly compresses, so that a short interval of time elapses before all of the energy of the

moving water is brought to bear upon the gate and the sides of the pipe. The pipe being slightly elastic yields to the pressure and thus absorbs some of the energy, but it returns to its normal size again, and thus causes a reflex pressure wave back from the valve. This pressure wave passes back and forth in the pipe until the energy is absorbed in the friction of the water and iron molecules among themselves and against each other. Thus, a high pressure wave may pass back and forth through a pipe a dozen or more times, the intensity of each wave becoming less until it finally fades away to the dead level of the initial static pressure.

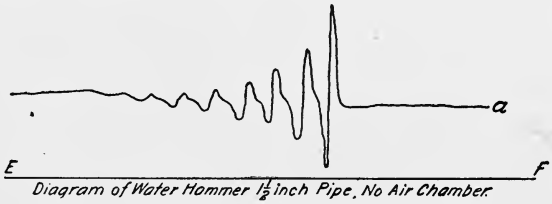

Diagram of Water Hammer 1½ inch Pipe, No Air Chamber.

Fig. 73

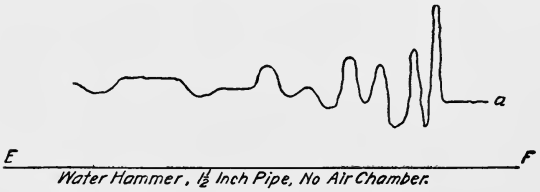

Water Hammer, ½ Inch Pipe, No Air Chamber.

Fig. 74

The intensity of a high-pressure wave caused by suddenly closing an ordinary ½-inch self-closing basin cock attached to the end of a 1½-inch pipe, is graphically shown in the following diagrams.

In the diagrams, the line EF represents zero or atmospheric pressure, the line *a* the static pressure of water in the pipes, that portion of the diagram above the level of the line *a* indicates the increase of pressure due to water hammer, and that portion of the diagram below the level of the line *a* shows the drop of pressure below the static pressure due to the reflex pressure wave.

Diagrams 73 and 74 were obtained when no air chamber was on the water pipe. It will be noticed that in the diagram, Fig. 75, the wave is more uniform and symmetrical than in the others, and dies away gradually with a uniform intensity to the static pressure. It will be further observed that although there are the same number of pulsations in

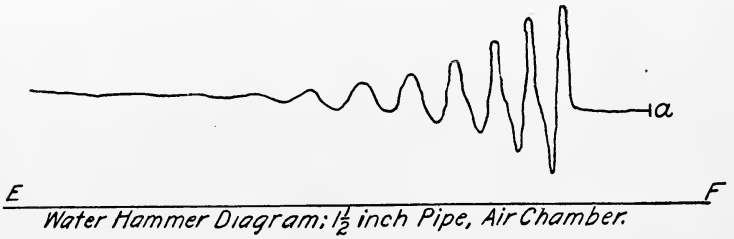

Fig. 75

this as in the other diagrams, they are of less intensity both above and below the static pressure line. That was due to the fact that an air chamber was used in this experiment. The experiment from which diagram Fig. 76 was obtained was conducted with the air chamber filled with water. Such a condition would be equivalent to having

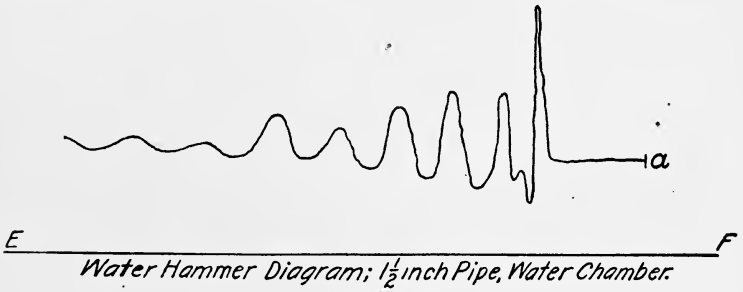

Fig. 76

no air chamber on the pipe, and the results obtained under those two conditions were very similar.

The conditions under which the experiments were made that produced the foregoing diagrams are given in Table XXIX, which shows intensity, duration and number of pressure waves produced in a 1½-inch pipe by suddenly

closing a ½-inch self-closing basin cock. Approximate time of closing cock $\frac{1}{100}$ of a second.

The intensity of a high pressure wave caused by suddenly arresting the momentum of a column of water in a 2-inch pipe by shutting a quick-closing gate valve of the full size of the pipe, is graphically shown by the diagram Fig. 77. It will be noticed that this diagram records a vacuum of about 15 pounds due to the reflex wave. This

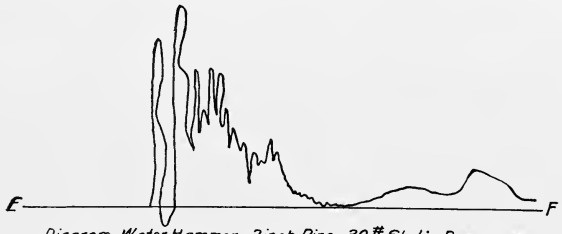

Diagram Water Hammer. 2inch Pipe. 30 # Static Pressure.

Fig. 77

is supposed by the experimenters* to be an error. It is believed by them that the momentum of the moving parts of the recording apparatus carried the line that much below the line of atmospheric pressure E F, and that likewise it recorded a maximum pressure of 15 pounds in excess of the pressure actually produced. Allowance should therefore be made for the error.

* Two students of Cornell College acting under the direction of Prof. Carpenter.

TABLE XXIX—INTENSITY OF WATER HAMMER

General Data	No Air Chamber		Air Chamber	Air Chamber Filled with Water
	Fig. 73	Fig. 74	Fig. 75	Fig. 76
Static pressure . . .	29.5	28.5	27.5	28.
Number of distinct blows .	8.	9.	9.	9.
Maximum pressure . .	72.5	69.0	61.5	76.0
Minimum pressure . .	2.5	16.	10.	9.
Time pulsations continue .	0.8 sec.	1.2	0.8	1.1 sec.
Pressure at end of one second	36.	36.	31.5	36.
Ratio of increase of pressure	2.47	2.56	2.15	2.70

NOTE—Table and diagrams from *Transactions of American Institute of Mechanical Engineers*, Vol. XV, page 510.

A number of experiments were made with the 2-inch pipe and quick-closing lever-handle gate valve, to determine the intensity of the water hammer under different velocities. Some of the experiments were made with an air chamber of 40 cubic inches capacity, attached to the water pipe near the valve. Some of them were made with an air chamber of 320 cubic inches capacity attached, and still others were made without an air chamber. From the results obtained by the experiments, the diagram Fig. 78 was plotted.

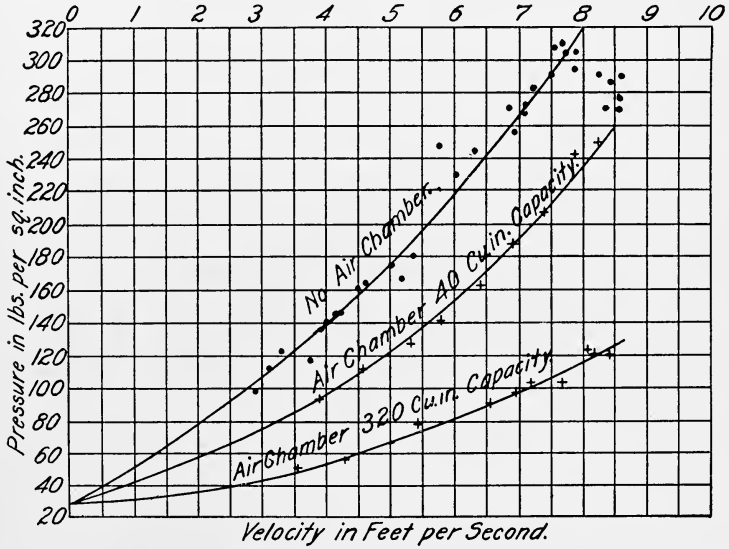

Fig. 78

In this diagram the curves all start at the point of static pressure in the pipe, as that is the initial pressure. The results of the experiments plotted on the diagrams show the high pressure that can be produced in a pipe by abruptly stopping the flow of water, even when the velocity and pressure are comparatively low. It also shows the value of air chambers on water supply pipes and the necessity for using slow-closing cocks in practice, particularly when the pressure of the water is high.

With a static pressure of 30 pounds per square inch and a velocity of 8 feet per second, the maximum pressure due to water hammer when no air chamber was used was 320 pounds to the square inch; an increase in pressure of 290 pounds or an ultimate pressure of almost eleven times the initial pressure. At a velocity of 4 feet per second with all of the other conditions unchanged, the maximum pressure was about 135 pounds per square inch, or an ultimate pressure of 4½ times the initial pressure. With an air chamber of 40 cubic inches capacity and a velocity of 8 feet per second, the maximum pressure was about 230 pounds, or an increase of 200 pounds above static.

When an air chamber of 320 cubic inches capacity was used, and with a velocity of 8 feet per second, the maximum pressure produced was less than that produced with a velocity of 3.5 feet per second when no air chamber was used.

It will be observed, however, that the experiment conducted with the ½-inch self-closing basin cock more nearly approaches the condition found in practice. In those experiments the ultimate pressure was equal to about three times the initial pressure, while in a water supply system provided with adequate air chambers at suitable points, and fitted with slow-closing faucets, the maximum pressure due to water hammer should never exceed double the static pressure.

No satisfactory formula has yet been advanced for calculating the force of impact due to water hammer. The following example, however, will serve to illustrate arithmetically the severe strain that a water pipe is sometimes subjected to when a bibb is closed.

If a 2-inch pipe 100 feet long, and subject to the pressure due to a head of 100 feet, has a ¾-inch bibb open at its extreme end, the velocity* of the spouting water will

*By the formula $48\sqrt{\frac{hd}{L+54\,d}}$

be 65.28 feet per second; as the area of the 2-inch pipe is 7.12 times the area of a ¾ bibb, the velocity of water in the 2-inch pipe will be $\frac{65.28}{7.12}=9.16$ feet per second. The weight of the column of water in motion, from which is derived the force of impact, is $\frac{\text{length of pipe}\times\text{area of pipe}}{1\text{ cubic foot}}=\frac{1{,}200\text{ inches}\times 3.14\text{ square inches}}{1{,}728\text{ cubic inches}}=2.18$ cubic feet, which, multiplied by 62.5, the weight of one cubic foot of water, gives 136.25 pounds, the weight of the moving column. The $\frac{\text{velocity}^2}{2}\times\frac{\text{weight}}{\text{gravity}}=\frac{9.16^2}{2}\times\frac{136.25}{32.16}=177.45$ foot pounds, the force with which the moving column of water would strike the bibb, if water were incompressible. As a matter of fact, however, water is slightly compressible, therefore the actual force of impact would be slightly less than this value.

The force of impact to a great extent is dependent upon the time consumed in closing the bibb. Thus, if the force of impact due to closing the bibb in one second= 174.45 pounds, the force due to closing it in ½ second would equal 354.9 pounds, and to closing it in ¼ second, 532.35 pounds.

Air Chambers—An air chamber is a tank, vessel or chamber so attached to a pipe that the confined air cannot escape, and so located that it will receive the initial impact and thus absorb the momentum of a column of water when it is suddenly brought to rest. When properly designed and located for the purpose, air chambers also provide expansion space for water in exposed pipes; the water expands upon freezing and might burst the pipes if provision were not made for its expansion.

The value of air chambers for water supply systems has never been fully appreciated, nor the sizes required under varying conditions fully understood; hence, in the exceptional cases where air chambers are installed, they are usually so small as to be of no practical value.

To wholly absorb the momentum of a moving column

of water, an air chamber should be proportioned to the quantity of water in motion and the static pressure due to the head. For instance, it would require a larger air chamber for a 4-inch pipe 100 feet long than for either a 4-inch pipe 50 feet long or for a 1-inch pipe 100 feet long, the pressure in all cases being the same; and it would require a larger air chamber for a 4-inch pipe 100 feet long under 100 pounds pressure than for the same size and length of pipe under 50 pounds pressure. This is due to the compressibility of air, which when the temperature remains unchanged varies inversely as the absolute pressure.* That is to say, if the pressure on air in a vessel be increased to twice the atmospheric pressure the air will be compressed to ½ its original volume. If the pressure be increased to 3 atmospheres, reckoning from absolute, the air will be compressed to $\frac{1}{3}$ its original volume. If the pressure be increased to 4, 5, 6, 8 or 10 atmospheres, the air will be compressed respectively to ¼, $\frac{1}{5}$, $\frac{1}{6}$, ⅛ or $\frac{1}{10}$ its original volume. Hence, if an air chamber containing 25 cubic feet were used in connection with a water supply system subject to a pressure of 11 atmospheres absolute or 147 pounds gauge pressure, the air in the chamber would be compressed to $\frac{1}{10}$ its original bulk or to 2.5 cubic feet. The size of air chamber required when the diameter and length of pipe and the static pressure are known, can be approximately determined by the following empirical rule:

RULE—Multiply the quantity of moving water in cubic feet by the coefficient of pressure in Table XXX. The product will be the contents in cubic feet of the air chamber.

EXAMPLE—What size air chamber will be required for a pipe 4 inches diameter and 100 feet long under a static gauge pressure of 58 pounds per square inch.

SOLUTION—$\frac{1200\times12.57}{1728}=8.7\times1.18=10.26$ cubic feet. Answer.

---

*Absolute pressure equals gauge pressure plus atmospheric pressure which at sea level is taken as 14.7 pounds.

TABLE XXX—COEFFICIENTS OF PRESSURE

Absolute Pressure	Gauge Pressure	No. of Atmospheres		Coefficient of Pressure	Portion of original bulk to which air will be compressed
		Abso.	Gauge		
29.4	14.7	2	1	.28	$\frac{1}{2}$
44.1	29.4	3	2	.59	$\frac{1}{3}$
58.8	44.1	4	3	.88	$\frac{1}{4}$
73.5	58.8	5	4	1.18	$\frac{1}{5}$
88.2	73.5	6	5	1.41	$\frac{1}{6}$
102.9	88.2	7	6	1.76	$\frac{1}{7}$
117.6	102.9	8	7	2.05	$\frac{1}{8}$
132.3	117.6	9	8	2.35	$\frac{1}{9}$
147.	132.3	10	9	2.65	$\frac{1}{10}$
161.7	147.	11	10	2.94	$\frac{1}{11}$
176.4	161.7	12	11	3.24	$\frac{1}{12}$

The coefficients of pressure in the foregoing table are arbitrarily obtained by allowing .2 for each 10-pound gauge pressure in the water mains. Therefore, the rule to determine the size of air chambers can be expressed as a formula, thus:

$$s=qc$$

In which s=size of air chamber in cubic feet

q=quantity of moving water in cubic feet

c=coefficient of friction which is .2 for each 10-pounds gauge pressure

EXAMPLE—What size air chamber will be required for a pipe 2 inches diameter and 50 feet long under a static gauge pressure of 100 pounds per square inch?

SOLUTION—Area of 2-inch pipe=3.36 inches. Coefficient of pressure equals .2×10=2.0; then $\frac{600\times3.36}{1728}\times2=2.33$ cubic feet. Answer.

Water at atmospheric pressure will absorb 4 per cent. its bulk of air. If the pressure of water be increased it will absorb 4 per cent. its bulk for each additional atmosphere of pressure. Hence, if the pressure in a system is 150 pounds, water will absorb 11×4 per cent.=44 per cent. its bulk of air, and the air will be soon absorbed from the air chambers; provision should therefore be made to recharge them when the air is exhausted. A pet cock in small air chambers and a stop cock in large ones very satisfactorily serve this purpose.

In arranging air chambers they should be so located that the energy or momentum of the column of water can be expended directly upon the air confined in them. By so locating them they receive the initial shock of the moving column of water and absorb most of its energy, thereby minimizing the intensity and reducing the number of high pressure waves. Air chambers should also be placed on the house side of water meters or other delicate apparatus that might be injuriously affected by water hammer. Under all conditions air chambers should be placed in a vertical position and never at the side or bottom of a pipe. If so placed, they will shortly fill with water and become useless.

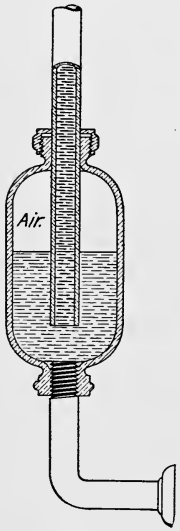

Fig. 79

Air chambers placed above faucets are not so liable to lose their air by absorption, because when passing the inlet to an air chamber so placed, the pressure is greatly reduced and if the water at static pressure is saturated with air, the air will be released by the reduction in pressure and some of it will rise and recharge the air chambers.

Air chambers should be provided on all distributing drums, on the suction and discharge pipes to power pumps, on the house side of delicate apparatus, like water meters, and on the supplies to fixtures. A very satisfactory type of air chamber for basin or other fixture supply is shown in Fig. 79. The enlarged chamber on this supply provides ample capacity for small pipes of moderate length and being placed directly on the supply pipe it receives the initial impact of the moving column of water.

MATERIALS—LEAD PIPES

Quality and Strength of Pipes—The safe working pressures that pipes will sustain depends upon the materials of which they are made and the thickness of their

walls. The ultimate stress that a material will sustain before rupture ensues, is known as the tensile strength of that material and is the resistance offered to its fibre being pulled apart.

There are four notable stresses to which a pipe is subjected before rupture ensues; they are: *Safe working pressure*, *elastic limit*, *absolute strength* and *bursting stress.* The elastic limit of a seamless drawn pipe is generally about one-half its absolute strength; in the case of cast-iron and lead pipes, however, the elastic limit is much lower, owing to the low coefficients of elasticity for these metals. In water supply systems where the pressure is fairly constant and free from water hammer one-half the elastic limit of seamless pipes can be taken as their safe working strength. If the supply system is not properly fitted with air chambers and is equipped with quick-closing faucets, the static pressure should not exceed one-third of the elastic limit of the pipe. In the case of metals with a low coefficient of elasticity, the safe working pressure for dead loads can be taken as one-fourth, and for live loads as one-sixth of the elastic limit of the pipe. This allowance provides a suitable factor of safety for the excessive pressures inseparable from most water supply systems.

A dead load is one that is fairly constant in pressure; a live load is one that fluctuates in pressure or is seriously affected by water hammer.

If a pipe is subjected to a great internal pressure, but of not sufficient intensity to strain it beyond its elastic limit, the pipe will yield to the pressure, but will immediately return to its normal condition upon being released from the pressure. If, however, the elastic limit is exceeded, the pipe will yield to the pressure and assume a new shape which it will retain after the pressure is removed.

When the pressure in a pipe is sufficient to strain it beyond the elastic limit the pipe yields to the pressure and the alteration of form becomes greater and greater until the absolute strength of the pipe is reached. Any

additional pressure will then cause a bursting strain and rupture the pipe.

The pressure at which lead pipe will burst can be found by the following rule:

RULE—Multiply the tensile strength of the metal in pounds per square inch by twice the thickness of the pipe in inches, and divide the product by the internal diameter of the pipe in inches. The result will be the pressure at which the pipe will burst.

Expressed as a formula:

$$p=\frac{2000\,t\,2}{d}$$

In which p=bursting pressure in pounds per square inch
2000=tensile strength of the metal in pounds per square inch
t=thickness of the metal in inches
d=internal diameter of pipe in inches

EXAMPLE—What is the bursting pressure of a lead pipe 3 inches in diameter and .5 inch thick?

SOLUTION—$\frac{2000\times.5\times2}{3}=\frac{2000}{3}=666.6$ pounds pressure.

The maximum thickness of a lead pipe that will burst under a given head of water can be found by the following rule:

RULE—Multiply the pressure of water in pounds per square inch by the internal diameter of the pipe in inches, and divide the product by twice the tensile strength of the metal in pounds per square inch. The result will be the thickness of the metal in inches.

Expressed as a formula:

$$t=\frac{p\,d}{4000}$$

In which t=thickness of the metal in inches
p=bursting pressure in pounds per square inch
d=internal diameter of pipe in inches
4000=constant; two tensile strengths

EXAMPLE—When the internal diameter of a pipe is 3 inches and the pressure to be sustained is 667 pounds per square inch, what is the minimum thickness of the metal that will withstand the pressure?

SOLUTION—$\frac{667\times3}{2000\times2}=\frac{2001}{4000}=.5$ inch

When the pressure of water is known the thickness of

a lead pipe that will safely sustain that pressure can be found by the following rule:

RULE—Multiply the pressure in pounds per square inch by the coefficient of the factor of safety; multiply that product by the internal diameter of the pipe in inches, and divide the product by twice the tensile strength of the metal in pounds per square inch. The result will be the thickness of the metal in inches.

The coefficients of the factors of safety are: for a live load 6 and for a dead load 4.

Expressed as a formula:

$$t=\frac{p\,c\,d}{4000}.$$

In which t=thickness of the metal in inches
p=pressure in pounds per square inch
c=coefficient of factor of safety
d=internal diameter of the pipe in inches
4000=constant; two tensile strengths

EXAMPLE—Find the thickness of metal required for a 3-inch pipe to safely stand a pressure of 167 pounds per square inch, (*a*) when the system is equipped with self-closing faucets and no air chambers, (*b*) When compression cocks are used and a suitable air chamber provided.

SOLUTION (*a*) $\frac{167\times6\times3}{2000\times2}=\frac{3006}{4000}=.75$ inch thick

(*b*) $\frac{167\times4\times3}{2000\times2}=\frac{2004}{4000}=.5$ inch thick

Dimensions and weights of stock sizes of lead pipe can be found in the following table:

TABLE XXXI—SIZE AND WEIGHT OF LEAD PIPES

Calibre	Weight per Foot	
	Pounds	Ounces
$\frac{3}{32}$-inch Tubing	....	1¼
⅛-inch Tubing	....	3
$\frac{3}{16}$-inch Tubing	....	4
¼-inch Tubing	....	6
Fish Seine	....	15
⅜-inch Aqueduct	....	8
Ex. Light	....	9

TABLE XXXI—SIZE AND WEIGHT OF LEAD PIPES—Continued

Calibre	Weight per Foot	
	Pounds	Ounces
⅜-inch Light	....	12
Medium	1	....
Strong	1	8
Ex. Strong	2	....
½-inch Aqueduct	....	10
Ex. Light	....	12
Light	1	....
Medium	1	4
Strong	1	12
A. A	2	....
Ex. Strong	2	8
Ex. Ex. Strong	3	....
⅝-inch Aqueduct	....	12
Ex. Light	1	4
Light	1	12
Medium	2	....
Strong	2	8
Ex. Strong	3	....
Ex. Ex. Strong	3	8
¾-inch Aqueduct	1	....
Ex. Light	1	8
Light	2	....
Medium	2	4
Strong	3	....
Ex. Strong	3	8
Ex. Ex. Strong	4	....
⅞-inch Aqueduct	1	8
Ex. Light	2	....
Light	2	8
Medium	3	....
Strong	3	8
1 -inch Aqueduct	1	8
Ex. Light	1	....
Light	2	8
Medium	3	4
Strong	4	....
Ex. Strong	4	12
Ex. Ex. Strong	5	8
1¼-inch Aqueduct	2	....
Ex. Light	2	8
Light	3	....
Medium	3	12
Strong	4	12
Ex. Strong	6	....
Ex. Ex. Strong	6	12
1½-inch Aqueduct	3	....
Ex. Light	3	8
Light	4	....
Medium	5	....

TABLE XXXI—SIZE AND WEIGHT OF LEAD PIPES—Continued

Calibre	Weight per Foot	
	Pounds	Ounces
1½-inch Strong	6	....
Ex. Strong	7	8
Ex. Ex. Strong	9	....
1¾-inch Ex. Light	3	12
Light	4	8
Medium	5	8
Strong	6	8
Ex. Strong	8	....
2 -inch Waste	3	....
Ex. Light	4	....
Light	5	....
Medium	7	....
Strong	8	....
Ex. Strong	9	....
Ex. Ex. Strong	10	8

WROUGHT IRON AND STEEL PIPES

Wrought pipes* are made in various sizes and weights and may be had plain, tar coated or galvanized. The weights of wrought pipe are designated as standard, extra strong and double extra strong; standard weight pipe being the weight most commonly used in plumbing installations. Wrought pipe is sometimes classified as butt-welded and lap-welded. In the manufacture of butt-welded pipe the edges of the metal that forms the pipe are butted together and welded. In the manufacture of lap-welded pipe the edges are first beveled and then lapped and welded to smooth interior and exterior finishes. Butt-welded pipes are not as strong in the seam as lap-welded pipes and are made only in small sizes of standard weight.

Wrought pipes are galvanized by cleaning them with acid and then immersing them in a bath of molten zinc or tin and zinc. This process makes the pipe a little more brittle than plain pipe but it lengthens its life by preserving it from corrosion. Furthermore, galvanizing protects the water that flows through the pipe from rust discoloration which would render the water unfit for domestic and for most manufacturing purposes.

*The term wrought pipe is here used to indicate either wrought iron or steel pipe.

The safe working pressure for wrought pipe does not depend altogether upon the thickness of the walls of the pipe and the tensile strength of the metal, but is governed by the strength of the seams and the method of connecting different lengths of pipe. For instance, a 1½-inch butt-weld standard pipe is tested to a pressure of 600 pounds and will safely sustain a working pressure of 300 pounds to the square inch, while a 1½-inch lap-weld standard pipe is tested to a pressure of 1000 pounds and will safely withstand a working pressure of 500 pounds per square inch.

The rule may be broadly stated that small sizes of standard weight pipe, ranging from ⅛ to 1½-inch diameters, are butt-welded and tested to 600 pounds pressure. Such pipes will safely sustain a working pressure of 300 pounds per square inch. All larger sizes of standard weight pipes are lap-welded. They are tested to 1000 pounds, and will safely sustain a working pressure of 500 pounds per square inch. Extra strong lap-welded pipes when joined with extra heavy couplings will safely sustain a working pressure of 1000 pounds per square inch.

Most of the pipe now sold as wrought iron is in fact made of steel. It cannot easily be distinguished from wrought iron pipe, and for most purposes is equally as good.

In Tables XXXII, XXXIII and XXXIV the weights and dimensions of standard, extra strong and double extra strong pipes can be found.

These tables of dimensions and capacity of pipes are from ⅛ to 6 inches inclusive. Larger sizes are so seldom used by plumbers that they have been omitted. The number of threads to the lineal inch can be found in table of standard wrought pipe. The number of threads is the same in the corresponding sizes of extra strong and double extra strong pipe.

BRASS PIPES

Brass pipes of iron-pipe sizes are made in stock lengths of 12 feet, although special lengths can be had to

TABLE XXXII—DIMENSIONS OF STANDARD WROUGHT PIPE

Diameter			Thickness	Circumference		Transverse Areas			Length of Pipe per Sq. Foot of		Length of Pipe containing one Cubic Foot	Nominal Weight per Foot	Number of Threads per Inch of Screw
Nominal Internal	Actual External	Approximate Internal Diameter		External	Internal	External	Internal	Metal	External Surface	Internal Surface			
Ins.	Ins.	Ins.	Ins.	Ins.	Ins.	Sq. Ins.	Sq. Ins.	Sq. Ins.	Feet	Feet	Feet	Lbs.	
$\frac{1}{8}$	.405	.27	.068	1.272	.848	.129	.0573	.0717	9.44	14.15	2513.	.241	27
$\frac{1}{4}$	.54	.364	.088	1.696	1.144	.229	.1041	.1249	7.075	10.49	1388.3	42	18
$\frac{3}{8}$	.675	.494	.091	2.121	1.552	.358	.1917	.1663	5.657	7.73	751.2	.559	18
$\frac{1}{2}$	.84	.623	.109	2.639	1.957	.554	.3048	.2492	4.547	6.13	472.4	.837	14
$\frac{3}{4}$	1.05	.824	.113	3.299	2.589	.866	.5333	.3327	3.637	4.635	270.	1.115	14
1	1.315	1.048	.134	4.131	3.292	1.358	.8626	.4954	2.904	3.645	166.9	1.668	$11\frac{1}{2}$
$1\frac{1}{4}$	1.66	1.38	.14	5.215	4.335	2.164	1.496	.668	2.301	2.768	96.25	2.244	$11\frac{1}{2}$
$1\frac{1}{2}$	1.9	1.611	.145	5.969	5.061	2.835	2.038	.797	2.01	2.371	70.66	2.678	$11\frac{1}{2}$
2	2.375	2.067	.154	7.461	6.494	4.43	3.356	1.074	1.608	1.848	42.91	3.609	$11\frac{1}{2}$
$2\frac{1}{2}$	2.875	2.468	.204	9.032	7.753	6.492	4.784	1.708	1.328	1.547	30.1	5.739	8
3	3.5	3.067	.217	10.996	9.636	9.621	7.388	2.243	1.091	1.245	19.5	7.536	8
$3\frac{1}{2}$	4.	3.548	.226	12.566	11.146	12.566	9.887	2.679	.955	1.077	14.57	9.001	8
4	4.5	4.026	.237	14.137	12.648	15.904	12.73	3.174	.849	.949	11.31	10.665	8
$4\frac{1}{2}$	5.	4.508	.246	15.708	14.162	19.635	15.961	3.674	.764	.848	9.02	12.49	8
5	5.563	5.045	.259	17.477	15.849	24.306	19.99	4.316	.687	.757	7.2	14.502	8
6	6.625	6.065	.28	20.813	19.054	34.472	28.888	5.584	.577	.63	4.98	18.762	8

order. The lengths are seamless drawn, can be had plain, polished, or nickel-plated and tempered hard, soft or medium; the medium temper, sometimes called regular temper, is just sufficiently annealed to make it suitable for

TABLE XXXIII—DIMENSIONS OF EXTRA STRONG WROUGHT PIPE

Diameter			Thickness	Nearest Wire Gauge	Circumference		Transverse Areas			Length of Pipe per Sq. Foot of		Nominal Weight per Foot
Nominal Internal	Actual External	Approximate Internal Diameter			External	Internal	External	Internal	Metal	External Surface	Internal Surface	
Ins.	Inches	Inches	Inches	No.	Inches	Inches	Sq. Ins.	Sq. Ins.	Sq. Ins.	Feet	Feet	Lbs.
$\frac{1}{8}$	.405	.205	.1	$12\frac{1}{2}$	1.272	644	.129	.033	.086	9.433	18.632	.29
$\frac{1}{4}$	54	.294	123	11	1.696	.924	.229	.068	161	7.075	12.986	.54
$\frac{3}{8}$	.675	.421	.127	$10\frac{1}{2}$	2.121	1.323	.358	.139	.219	5.657	9.07	.74
$\frac{1}{2}$	.84	.542	.149	9	2.639	1.703	.554	231	.323	4.547	7.046	1.09
$\frac{3}{4}$	1.05	.736	.157	$8\frac{1}{4}$	3.299	2.312	.866	.452	414	3.637	5.109	1.39
1	1 315	.951	182	3	4.131	2.988	1.358	.71	.648	2.904	4.016	2.17
$1\frac{1}{4}$	1 66	1.272	.194	$6\frac{1}{4}$	5.215	3.996	2.164	1.271	.893	2.301	3.003	3.
$1\frac{1}{2}$	1.9	1.494	.203	6	5.969	4.694	2.835	1.753	1.082	2.01	2.556	3.63
2	2.375	1.933	.221	5	7.461	6.073	4.43	2.935	1.495	1.608	1.975	5.02
$2\frac{1}{2}$	2 875	2.315	.28	2	9.032	7.273	6.492	4.209	2.283	1.328	1.649	7.67
3	3.5	2.892	.304	1	10.996	9.085	9.621	6.935	3.052	1.091	1.328	10.25
$3\frac{1}{2}$	4	3.358	.321	0	12.566	10.549	12.566	8.856	3.71	.955	1.137	12.47
4	4.5	3.818	.341	0	14.137	11.995	15.904	11.449	4.455	.849	1.	14.97
$4\frac{1}{2}$	5.000	4.280	360	00	15.708	13.446	19.635	14.387	5.248	764	.748	18.22
5	5.563	4 813	.375	00	17.477	15 120	24.306	18.193	6.12	687	.793	20.54
6	6.625	5.75	.437	000	20.813	18.064	34.472	25.967	8 505	.577	.664	28.58

Extra strong pipe is always shipped without threads or couplings, unless otherwise specified.

plumbing and steam work. Seamless brass pipes of iron pipe sizes are not made larger than 6 inches in diameter. Up to that size they may be had in standard and extra

heavy weights, which correspond in safe working pressures with standard and extra heavy wrought pipes.

TABLE XXXIV—DIMENSIONS OF DOUBLE EXTRA STRONG WROUGHT PIPE

Diameter			Thickness	Nearest Wire Gauge	Circumference		Transverse Areas			Length of Pipe Per Sq. Foot of		Nominal Weight per Foot
Nominal Internal	Actual External	Approximate Internal Diameter			External	Internal	External	Internal	Metal	External Surface	Internal Surface	
Ins.	Inches	Inches	Inches	No.	Inches	Inches	Sq. Ins.	Sq. Ins.	Sq. Ins.	Feet	Feet	Pounds
¼	.84	.244	.298	1	2.639	766	.554	047	.507	4.547	15.667	1.7
⅜	1.05	.422	314	1	3.299	1.326	.866	.139	.727	3.637	9.049	2.44
1	1.315	.587	.364	00	4.131	1 844	1.358	.271	1.087	2.904	6.508	3.65
1¼	1.66	.885	.388	00	5.215	2.78	2.164	.615	1.549	2.304	4.317	5.2
1½	1 9	1.088	.406	000	5.969	3.418	2.835	93	1.905	2.01	3.511	6.4
2	2.375	1.491	.442	0000	7.461	4.684	4.43	1.744	2.686	1.608	2.561	9.02
2½	2.875	1.755	.560	⅛	9.032	5.513	6.492	2.419	4.073	1.328	2.176	13.68
3	3.5	2.284	.608	—	10.996	7.175	9.621	4.097	5 524	1.091	1.672	18.56
3½	4.	2 716	.642	×	12.566	8 533	12.566	5.794	6 772	955	1.406	22.75
4	4.5	3.136	.682	⅛	14.137	9.852	15.904	7.724	8.18	.849	1.217	27.48
4½	5.000	3.564	.718	—	15.708	11.197	19.635	9.976	9.659	.764	1.000	32.53
5	5.563	4.063	.75	¼	17.477	12.764	24.306	12.965	11.34	.687	.940	38.12
6	6.625	4.875	.875	¼	20.813	15.315	34 472	18.666	15.806	.577	.784	53.11

Double extra strong pipe is always shipped without threads or couplings unless otherwise specified.

The sizes and weights of iron-pipe sizes of brass pipes may be found in the following table:

TABLE XXXV—SIZES AND WEIGHTS OF SEAMLESS BRASS TUBING

Iron Pipes Size, Inches	⅛	¼	⅜	½	¾	1	1¼	1½	2	2½	3	3½	4	5	6
Weights per Lineal Ft.	.25	.43	.62	.90	1.25	1.70	2.50	3.00	4.00	5.75	8.30	10.90	12.70	15.75	18.31

Brass fittings should correspond in finish with the pipes they join. The fittings are similar in pattern to beaded malleable iron fittings.

Iron Pipe Fittings—Threaded fittings for small sizes of wrought iron pipes are usually made of malleable iron, and have a bead cast around the outlets to strengthen them and prevent their splitting when being screwed on a pipe. For the larger sizes of wrought pipes, cast iron fittings, similar to those used for steam fittings, are generally used.

COCKS AND VALVES

Gate Valves—The two principal types of valves used to stop the flow of water in water supply systems are gate

valves and globe valves. A gate valve is shown in section in Fig. 80. It is operated by raising and lowering the double-faced wedge-shaped gate, *a*. When the valve is closed, the two faces of the gate are tightly pressed against the seats, *b b*, thus effecting a double seal. The chief advantages of a gate valve are its tight seal and full size straightway opening, which offers no greater resistance to the flow of water than would an ordinary pipe coupling or other fitting of equal length. Either end of this make of gate valve may be used as the inlet, although there are some makes of gate valves that are single seated or have only one gate face. Such valves should be screwed on a pipe with the valve face to the pressure.

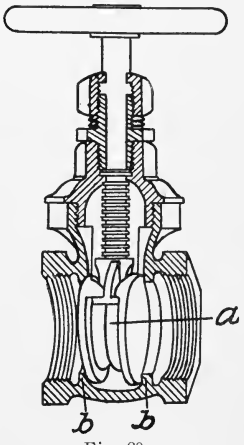

Fig. 80

Globe Valves—The type of valve most commonly used for water supply systems is the globe valve, shown in section in Fig. 81. This type of valve has an inlet and outlet end, and a valve disk, *a*, that closes against the pressure. The valve is operated by lowering the disk, *a*, until it presses firmly and evenly on the valve seat, *b*, and thus cuts off the flow of water. By turning the valve stem to the left, thus raising the valve disk from its seat, the water is turned on. Instead of an interchangeable soft disk, as shown in the illustration, some globe valves have a brass disk that closes on a brass seat. Such valves seldom remain

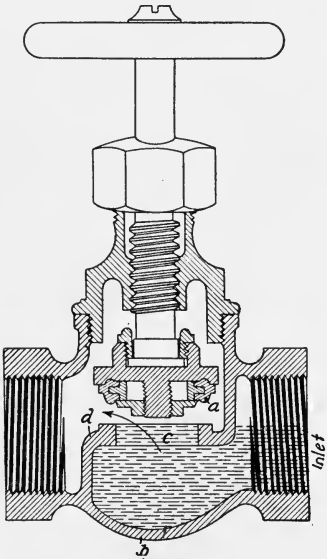

Fig. 81

water tight more than a few months and cannot be repaired as easily and inexpensively as can soft disk valves; therefore, it is a matter of economy to use soft seat valves. The principal objections to the use of globe valves are, that the opening, *c*, through the seat of the valve is never the full area of the corresponding size of pipe, and therefore not only restricts the flow but offers considerable frictional resistance; furthermore, the opening is not straightway, consequently it offers additional frictional resistance to the flow of water. In addition to the frictional resistance and loss of flow caused by globe valves, they also, when placed on horizontal pipes, form traps that keep the pipes half full of water when the pipes are drained. This is shown by the part, *d*, which shows the depth of water retained by a globe valve when the water is drawn off from the system. This latter objection, however, can to a great extent be overcome by turning the valve on its side, so the stem will be nearly horizontal. In this position the opening in the valve seat is as low as the bottom of the pipe and permits all water to drain out.

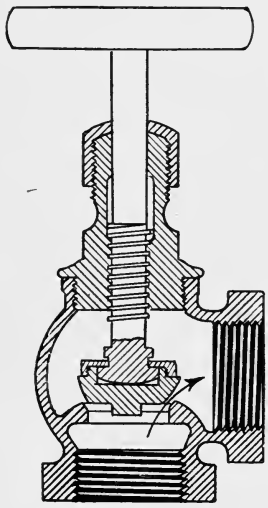

Fig. 82

Angle Valves—A type of valve much used for controlling the water supply to separate fixtures is shown in Fig. 82. It is known as an angle valve and is a modification of the globe valve. The openings to an angle valve are at right angles to each other so that the valve can serve the dual purpose of controlling the water and changing the direction of the pipe. Angle valves are made with metal seats and with seats of soft materials, the latter being the better kind for use on water supplies.

Lift Check Valves—A check valve is an automatic valve that opens to the pressure of water on one side but closes

tightly when pressure is applied to the opposite end of the valve. Where it is necessary that water should always flow in one direction and there is a possibility of a reverse flow, a check valve should be used. There are two common types of check valves; lift check valves, and swing check valves. A lift valve is shown in section in Fig. 83. In this type of valve the check, *a*, seats by gravity when pressure in the system on both sides of the valve is equal. When pressure on the inlet end of the valve exceeds that in the outlet, as for instance when a faucet is opened, the pressure unseats the check, *a*, from the seat, *b*, and permits water to flow through the valve. If on the contrary there is an excess of pressure on the outlet end of the valve, the pressure will the more tightly seat the check and prevent any water from passing back through it. Check valves are made both for vertical and for horizontal pipes.

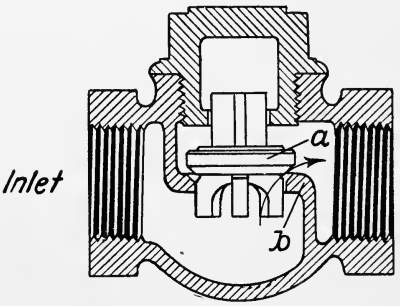

Fig. 83

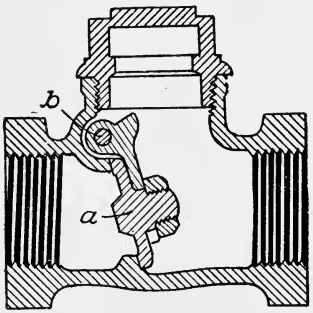

Fig. 84

Swing Check Valve—A valve of this type is shown in section in Fig. 84. It derives its name from the fact that the metal flap, *a*, yielding to the pressure of water, swings on the pivot, *b*, and thus presents a straightway opening for the flow of water. This type of check valve compares with the lift check valve about as a gate valve compares with a globe valve. The swing check valve offers less resistance to the flow of water through it and has a straightway opening of almost the full size of the valve. In the lift check

valve, on the contrary, the water must pass through a reduced opening in the valve seat and must make two right angle turns while doing so.

Ground Key Cocks—May be either stop cocks for controlling water in a pipe, or faucets for drawing water at a fixture. The only difference is in their exterior appearance, the principles of construction and operation being the same for both patterns. Ground key cocks can be had for lead pipe, for iron pipe, and, in the case of stop cocks, they may be had with one end threaded for iron pipe and the other end prepared for lead pipe. Cocks for iron pipe can be had tapped with female threads or threaded to screw in a fitting. A sectional illustration of a ground key cock is shown in Fig. 85. The plug, *a*, is ground to a watertight fit in the cock, *b*, and water is turned on and off by giving a one-quarter turn to the lever, *c*. The principal objection to this kind of a cock is that the constant wearing of the plug and cock every time the water is turned on or off, soon causes the cock to leak, and the leak can only be repaired by regrinding the plug, which

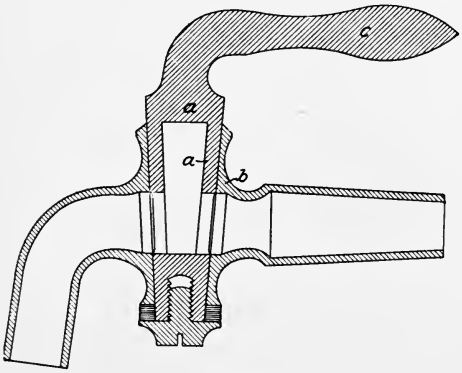

Fig. 85

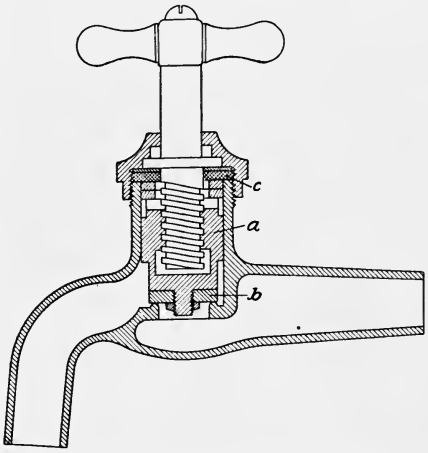

Fig. 86

is a tedious and rather expensive undertaking, sometimes costing more than would a new cock. Another objection that should not be overlooked, is the quickness with which this type of cock shuts off the water. Where the water pressure is high, this might cause serious damage to pipes and fixtures.

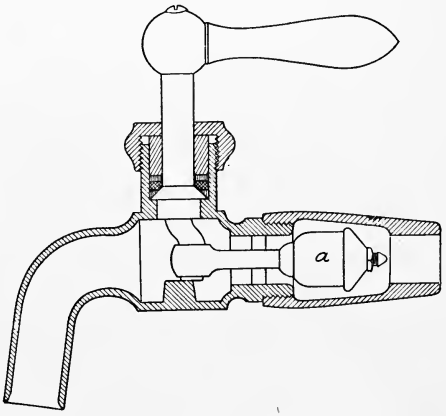

Fig. 87

Compression Cocks—A compression cock such as is used at kitchen sinks is shown in section in Fig. 86. In construction it is quite similar to a globe valve and, like one, it closes against the pressure. The core, *a*, of a compression cock is fitted with a soft disk packing, *b*, which can be easily renewed when the cock leaks. They are also fitted with a rubber packing, *c*, or in some cases with a ground joint to prevent water spouting out around the compression stem. Compression stop cocks should be fitted with an auxiliary stuffing box around the stem to withstand the back pressure they are subjected to.

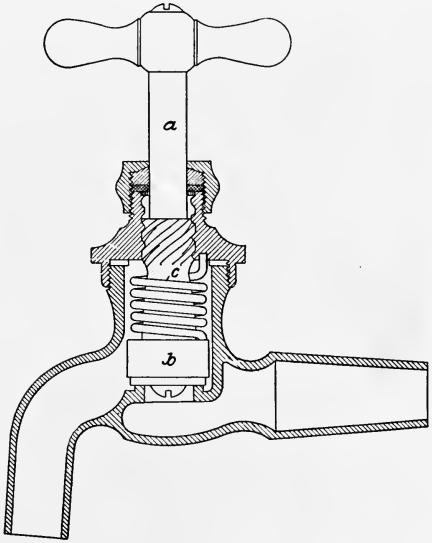

Fig. 88

Fuller Pattern Faucets—A very good type of faucet

LIBRARY

for low pressure work is shown in section in Fig. 87. This type of cock is quick closing and closes with the pressure, a rubber packing, *a*, effecting the seal. On account of the quickness with which this kind of cock can be closed, each supply pipe to which they are connected should be provided with an air chamber and they should not be used on high pressure work.

Self-closing Faucets—In localities where water is scarce, or where through carelessness in those who use the fixtures much water will be wasted, it is customary to fit all fixtures with self-closing faucets. Water can be drawn from a self-closing bibb only while it is held open ; the moment the hand is removed, the faucet is immediately closed by a spring provided for that purpose. A self-closing sink faucet is shown in Fig. 88. When the stem, *a*, is turned to the left it raises the block, *b*, thus compressing the spring, *c*, which, as soon as the pressure is removed, returns to its original shape, thus closing the faucet.

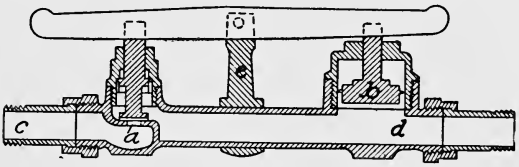

Fig. 89

Pressure Regulators are apparatus for controlling or decreasing the pressure of water within a building and thus relieving the system of excessive strain. By their use, the static pressure within a building can be maintained at a pressure of 15, 25 or more pounds, while the static pressure in the street might exceed 100 pounds; at the same time, the volume of water or the pressure of the water while running will not be affected by the pressure reducing valve. The principle of operation of a pressure regulator can be explained by a reference to Fig. 89. The area of the valve seat, *a*, bears a certain relation (say one-fourth) to the area of the disk, *b*; consequently, with a pressure of 100 pounds per square inch in the service pipe, *c*, the valve, *a*, will seat when the pressure in *d* exceeds 25 pounds. This is

owing to the greater area in *b*, which compensates for the greater pressure acting on the less area of *a*. The pressure in *d* at which the valve seats, or in other words, the amount of pressure to be carried in the water supply system, can be regulated by adjusting the fulcrum, *e*. Moving it to the right will increase and moving it to the left will decrease the pressure in the system.

A sectional illustration of a pressure regulator extensively used in practice is shown in Fig. 90. In this regulator two pistons, called cups, of different areas are used instead of the two discs in the former illustration. The operation of the valve is as follows: When water is admitted to the pressure side of the regulator, it passes through the valve port and fills the system of piping on the house side; as soon as the system of piping is filled, the back pressure acts on the upper cup and tends to raise the stem and thus close the valve. As the area of the upper cup is greater than that of the lower cup, a less pressure per square inch is required on the low-pressure side to exceed the pressure exerted on the lower cup on the high-pressure side; consequently, when the pressure on the house side exceeds a certain percentage of the street pressure, the valve will close. As soon as a faucet on the house side of the regulator is opened, it lowers the pressure on that side, and the high-pressure acting on the lower cup will again open the valve.

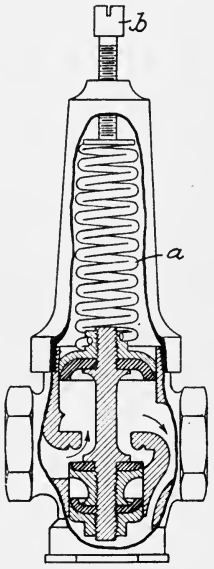

Fig. 90

The area of the low-pressure cup bears a certain ratio to that of the high-pressure cup, consequently, if provision were not made to overcome the difference between the force tending to close the valve and the force tending to hold it open when the pressure on both sides is equal, it would be impossible to maintain a pressure on the house

side of the valve greater than that due to the ratio between the two cups. For instance, if the ratio of area of the high-pressure cup to that of the low-pressure cup were one to four, and the pressure on the street side were 40 pounds per square inch, the valve would close when the pressure on the house side exceeded 10 pounds per square inch and no higher pressure could be maintained. To overcome this difficulty a spring, *a*, and tension screw, *b*, are provided. Turning the screw to the right increases the tension of the spring against which the low pressure must act to close the valve, and, in proportion as the tension screw is screwed down, the pressure on the house side of the valve will be increased.

There is a limit to the reduction of pressure possible to obtain by means of a pressure regulator. This reduction depends to a great extent on the pressure of water on the street side of the valve. For instance, the lowest pressure it is possible to obtain for 40 pounds pressure is about 14 pounds; 50 pounds pressure, 16 pounds; 60 pounds pressure, 18 pounds; 70 pounds pressure, 20 pounds; 85 pounds pressure, 21½ pounds; 100 pounds pressure, 23 pounds; 115 pounds pressure, 25 pounds; 125 pounds pressure, 27 pounds; 135 pounds pressure, 29 pounds; 150 pounds pressure, 31 pounds; 175 pounds pressure, 35 pounds; 200 pounds pressure, 39 pounds.

On account of the weight of the stem and the friction of the moving parts, it is impossible to obtain as low a reduction as zero, but any pressure between the two extremes mentioned can be secured by adjusting the tension screw on top of the cap.

A relief or safety valve should always be used in connection with a pressure regulator, to provide relief to the system should excessive pressure be generated by the water heating apparatus.

DETAILS OF INSTALLATION

Service Connections—Small service pipe connections to street mains are usually made by drilling and then tapping with a pipe thread the street main. A brass corporation

cock, *a*, Fig. 91, to which is connected the service pipe, *b*, is then screwed into the street main. When the service pipe is made of brass or wrought iron, a short length of lead pipe laid wavy, should be inserted to provide a flexible connection that will not be affected by a subsequent settlement of either the service pipe or the street main.

In some waterworks systems where the pressure is low the street main is drilled and a corporation cock driven instead of being screwed into the main. While this form of corporation cock is extensively used, it is not wholly satisfactory even for low pressure systems, and owing to the great liability of their leaking they should never be used where the street mains are subjected to high pressure.

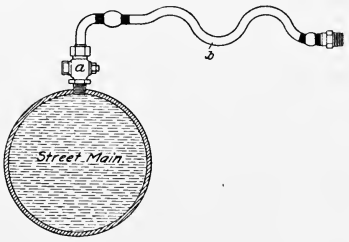

Fig. 91

Connections to the water mains are made by an employee of the municipality or water company that owns the system. This is done while the mains are under pressure and is accomplished without the loss of water from the mains. It is made possible by the use of a drilling and tapping machine designed for the purpose.

The largest tap permitted by most water companies is ¾ inch diameter; hence, when larger sizes of service pipes are required, connections for them must be made to the street main either by inserting a special fitting or by means of a multiple service connection as shown in

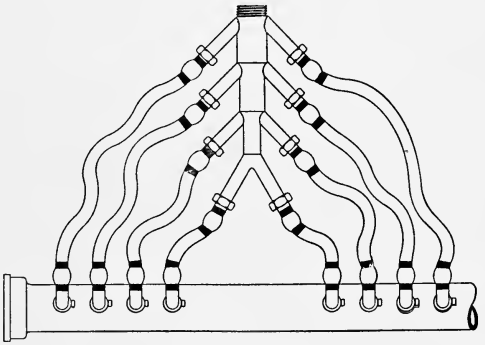
Fig. 92

Fig. 92. With a moderate sized street main, connections for service pipes over 2½ inches diameter should be made by means of a special fitting; for all smaller sizes of service pipes and for all sizes of service pipes when the water main is extremely large, connections may be made by means of a multiple connection. In calculating the number of branch services for a multiple connection allowance should be made for the greater amount of friction in small pipes. This is no inconsiderable item as the following will show: At the same velocity of flow, doubling the diameter of a pipe increases its capacity four times; but the same head or pressure will produce different velocities in pipes of different sizes or lengths, and doubling

TABLE XXXVI—EQUATION OF PIPES

STANDARD STEAM AND GAS PIPES

Dia.	½	¾	1	1½	2	2½	3	4	5	6	7	8	9	10	11	12	13	14	15	16	17	Dia.
½		2.27	4.88	15.8	31.7	52.9	96.9	205	377	620	918	1,292	1,767	2,488	3,014	3,786	4,904	5,927	7,321	8,535	9,717	½
¾	2 60		2.05	6.97	14.0	23.3	42.5	90.4	166	273	405	569	779	1,096	1,328	1,668	2,161	2,615	3,226	3,761	4,282	¾
1	7.55	2.90		3.45	6.82	11.4	20.9	44.1	81.1	133	198	278	380	536	649	815	1,070	1,263	1,576	1,837	2,092	1
1½	24.2	9.30	3.20		1.26	3.34	6.13	13.0	23.8	39.2	58.1	81.7	112	157	190	239	310	375	463	539	614	1½
2	54.8	21.0	7.25	2.26		1.67	3.06	6.47	11.9	19.6	29.0	40.8	55.8	78.5	95.1	119	155	187	231	269	307	2
2½	102	39.4	13.6	4.23	1.87		1.83	3.87	7.12	11.7	17.4	24.4	33.4	47.0	56.9	71.5	92.6	112	138	161	184	2½
3	170	65.4	22.6	7.03	3.11	1.66		2.12	3.89	6.39	9.48	13.3	20.9	25.7	31.2	39.1	50.6	61.1	75.5	88.0	100	3
4	376	144	49.8	15.5	6.87	3.67	2.21		1.84	3.02	4.48	6.30	8.61	12.1	14.7	18.5	23.9	28.9	35.7	41.6	47.4	4
5	686	263	90.9	28.3	12.5	6.70	4.03	1.83		1.65	2.44	3.43	4.69	6.60	8.00	10.0	13.0	15.7	19.4	22.6	25.8	5
6	1,116	429	148	46.0	20.4	10.9	6.56	2.97	1.63		1.48	2.09	2.85	4.02	4.86	6.11	7.91	9.56	11.8	13.8	15.6	6
7	1,707	656	226	70.5	31.2	16.6	10.0	4.54	2.49	1.51		1.41	1.93	2.71	3.28	4.12	5.34	6.45	7.97	9.31	10.5	7
8	2,435	936	322	101	44.5	23.8	14.3	6.48	3.54	2.18	1.43		1.35	1.93	2.33	2.92	3.79	4.57	5.67	6.60	7.52	8
9	3,335	1,281	440	137	60.8	32.5	19.5	8.85	4.85	2.98	1.95	1.37		1.41	1.71	2.14	2.77	3.35	4.14	4.83	5.50	9
10	4,393	1,688	582	181	80.4	42.9	25.8	11.7	6.40	3.93	2.57	1.80	1.32		1.21	1.52	1.97	2.38	2.94	3.43	3.91	10
11	5,642	2,168	747	233	103	55.1	33.1	15.0	8.22	5.05	3.31	2.32	1.70	1.28	.	1.26	1.63	1.88	2.43	2.83	3.22	11
12	7,087	2,723	938	293	125	69.2	41.6	18.8	10.3	6.34	4.15	2.91	2.13	1.61	1.26		1.30	1.57	1.93	2.26	2.58	12
13	8,657	3,326	1,146	358	158	84.5	50.7	23.0	12.6	7.75	5.07	3.56	2.60	1.98	1.53	1.22		1.21	1.49	1.74	1.98	13
14	10,600	4,070	1,403	438	193	103	62.2	28.2	15.4	9.48	6.21	4.35	3.18	2.41	1.88	1.50	1.22		1.24	1.44	1.64	14
15	12,824	4,927	1,698	530	234	125	75.3	34.1	18.7	11.5	7.52	5.27	3.85	2.92	2.27	1.81	1.48	1.21		1.17	1.35	15
16	14,978	5,758	1,984	619	274	146	88.0	39.9	21.8	13.4	8.78	6.15	4.51	3.41	2.66	2.12	1.73	1.42	1.18		1.14	16
17	17,537	6,738	2,322	724	320	171	103	46.6	25.6	15.7	10.3	7.20	5.27	3.99	3.11	2.47	2.03	1.66	1.37	1.17		
18	20,327	7,810	2,691	840	371	198	119	54.1	29.6	18.2	11.9	8.35	6.11	4.63	3.60	2.87	2.35	1.92	1.59	1.36	1.16	
20	26,676	10,249	3,532	1,102	487	260	157	70.9	38.9	23.9	15.6	10.9	8.02	6.07	4.73	3.76	3.09	2.52	2.08	1.78	1.52	
24	42,624	16,376	5,644	1,761	778	416	250	113	62.1	38.2	25.0	17.5	12.8	9.70	7.55	6.01	4.92	4.02	3.32	2.84	2.43	
30	75,453	28,990	9,990	3,117	1,378	736	443	201	110	67.6	44.2	31.0	22.7	17.2	13.4	10.7	8.72	7.14	5.88	5.03	4.30	
36	120,100	46,143	15,902	4,961	2,193	1,172	705	319	175	108	70.4	49.3	36.1	27.3	21.3	16.9	13.9	11.3	9.37	8.01	6.85	
42	177,724	68,282	23,531	7,341	3,245	1,734	1,044	473	259	159	104	73.0	53.4	40.5	31.5	25.1	20.5	16.8	13.9	11.9	10.1	
48	249,351	95,818	33,020	10,301	4,554	2,434	1,465	663	363	223	146	102	75.0	56.8	44.2	35.2	28.8	23.5	19.4	16.6	14.2	
Dia.	½	¾	1	1½	2	2½	3	4	5	6	7	8	9	10	11	12	13	14	15	16	17	

ACTUAL INTERNAL DIAMETERS

the diameter of a pipe when the pressure remains constant, increases the capacity of the pipe about six times, the difference being usually stated to vary as the square root of the fifth power of the diameter. The number of small pipes required to equal the capacity of a large one can be found in the above table of equation of pipes.

In Table XXXVI figures above the diagonal line refer to standard wrought pipes the diameters of which vary a little from the actual diameters given. In the lower part of the table the figures refer to pipes of the actual sizes given.

The table is used in the following manner: If it is desired to know the number of ¾-inch taps or pipes that will equal in discharging capacity a 2-inch pipe, glance down the column marked 2 to the intersection of the line in the first column marked ¾. This shows that it requires fourteen ¾-inch taps or pipes to equal one 2-inch pipe. To find the number of pipes of one size that equals the discharging capacity of another, in the lower part of the table, follow down the columns the size of the smaller pipe until it intersects the line of the larger one. Thus to find the number of 2-inch pipes that equal a 10-inch pipe, follow down the column marked 2 to where it intersects the line marked 10 and it will be found that 80.4 two-inch pipes equal in discharging capacity one 10-inch pipe.

Hotels, clubs, hospitals and other buildings that require an uninterrupted supply of water should when possible be provided with two service pipes. Each service pipe should be of sufficient capacity to supply the entire building and should be connected to the street main in different streets. The service pipes should then be cross connected within the building, so that if water is shut off from one city main an adequate supply can be drawn from the other one.

Service pipes are usually provided with a stop cock located at the curb. This curb cock gives the water company control of the supply within a building, so that water can be shut off at any time without digging down to the corporation cock or entering the premises.

Sizes of Water Pipes—Water supply systems should be so proportioned that a plentiful supply of water at low velocity can be had at all fixtures. If pipes are too small, there will be the annoyance of one faucet robbing another, also, owing to the high velocity of flow when water is being

drawn, a disagreeable singing or hissing noise will be heard in the pipes.

In proportioning a water supply system the chief condition to be ascertained is the probable number of fixtures at which water will simultaneously be drawn. In residences and other buildings with comparatively few fixtures the supply pipes should be proportioned to supply all the fixtures simultaneously. In hotels, apartment houses and like buildings, however, such provision is unnecessary. It is not probable that more than one fixture at a time will be in use in a bath room, nor is it probable that more than one fixture at a time will be used in the kitchen, although it is quite probable that fixtures in kitchen and bath room will be simultaneously used; hence, if provision be made to supply at the same time one fixture in each group within a building, the pipes will be of sufficient capacity to meet all requirements.

The largest pipe used to supply any fixture is ¾ inch diameter and the average size ½ inch in diameter. Faucets and cocks for ¾-inch pipes seldom have an unobstructed waterway larger than ½-inch diameter, while the waterway of ½-inch cocks and faucets seldom exceeds ⅜ inch in diameter; hence, if in all water pipes an allowance is made of the sectional area of a ½-inch pipe for one fixture in each group, the system will be so proportioned that an adequate supply of water at low velocity will be had at all fixtures. An exception to the foregoing statements must be made in the case of public toilet rooms and batteries of wash basins in factories or other institutions. All the fixtures in such batteries might be used at the same time and an allowance of the sectional area of a ½-inch pipe for each fixture should be made.

Example—What size of water main will be required for an apartment house of fifteen families, each family being provided with bath room and kitchen?

Solution—Fifteen bath rooms and fifteen kitchens equal thirty groups of fixtures to be supplied at once, and allowing the sectional area of a ½-inch pipe for each group of fixtures requires a pipe with a capacity of thirty ½-inch pipes. From Table XXXVI will be found that a 2-inch standard pipe has the required capacity.

EXAMPLE II—What size of service pipe will be required to supply a hotel equipped with 280 bath rooms and 20 other groups of fixtures?

SOLUTION—280 + 20 = 300, and according to Table XXXVI, about a 4½-inch pipe would equal in capacity three hundred ½-inch pipes.

Distributing Manifolds—In piping a building for water supply some system should be observed whereby all rising lines will start from some common point centrally located. By observing such a system, all supply lines can be controlled by valves located at one point of the building; provision can be made to drain the pipes when the water is shut off; a better distribution of water will be effected, and systematizing the work will so simplify the construction that it can readily be understood and more cheaply installed.

In dwelling houses, branches to the several fixtures or groups of fixtures should be taken from the hot and cold water supply mains at some convenient point in the kitchen. A suitable place for the grouping of valves, branches and drains is over the kitchen sink, as shown in Fig. 93. Another convenient place is on the ceiling or back of the range boiler, as shown in Fig. 94. This system places control of the entire water supply under the care of the cook, who can quickly cut off the supply of water from any branch that is out of order.

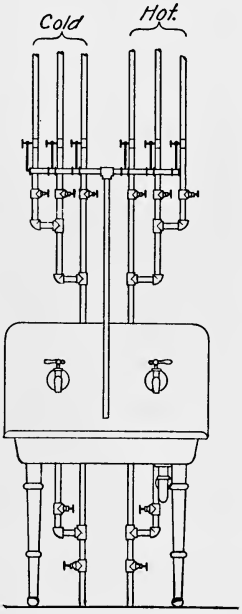

Fig. 93

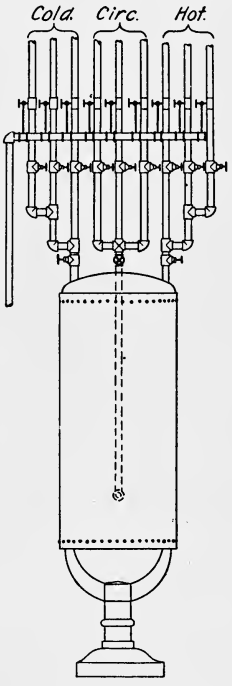

Fig. 94

In the installation of water supply systems in large buildings, the distributing manifold is usually located in the basement or cellar, and a separate line of supply pipe taken from the manifold to supply each rising line and separate group of fixtures in the building. Manifold headers for hot, cold and circulation pipes are shown in Fig. 95. When used in connection with low pressure supplies the air chambers are usually made of capped iron pipe located at the ends of the manifold or at the center directly over the supply inlet to the headers.

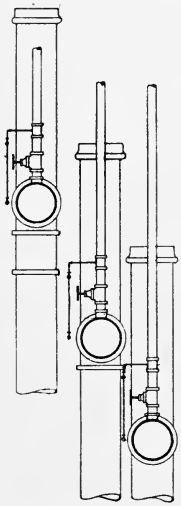

Fig. 95—End Elevation

In high-pressure water supply systems, a drum or cylinder air chamber is generally used in connection with the cold water manifold header. This method of installation is shown in Fig. 96. The cold water supply main connects to the air chamber near the bottom so as to entrap the air within. Connections from the air chamber to the distributing manifold are also taken from the bottom of the cylinder so air cannot escape in that way. In other respects the manifold header is connected in the same

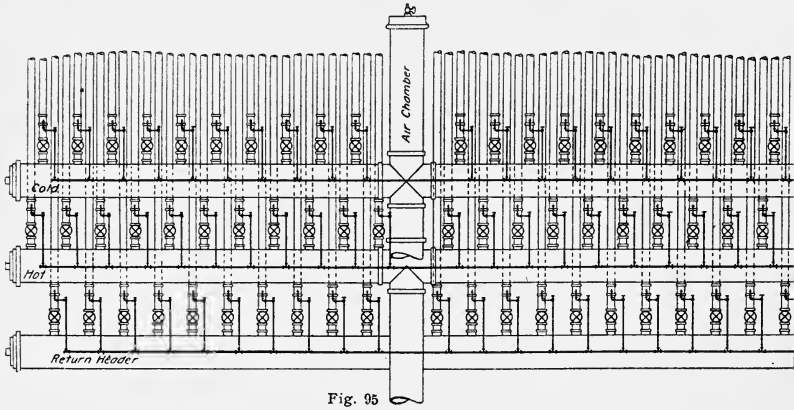

Fig. 95

manner as low-pressure manifolds. In extremely tall buildings, where the upper floors are supplied from tank pressure, while the lower floors are supplied direct from the city mains, two sets of hot, cold and return distributing manifolds are installed, one set for each source of supply.

System of Valving—System should be observed in the arrangement of valves so that in case of emergency, without loss of time, water can be cut off from the line affected. A system of valving should consist not only of controlling each separate line and branch in the supply system with a valve, but also in so arranging them that they will be accessible, and that valves for like purpose will bear the same relative position in relation to the system. For instance, each distributing

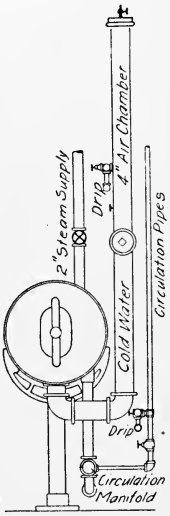

Fig. 96—End Elevation

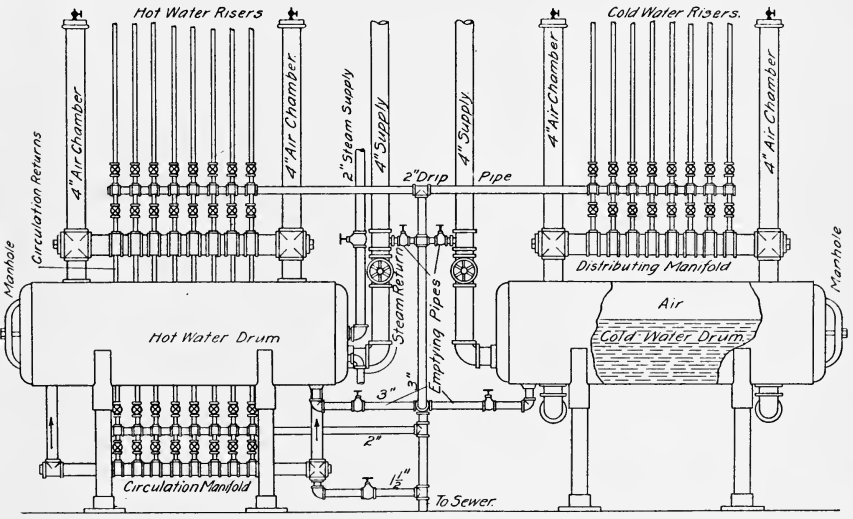

Fig. 96

main* should be valved close to where it is connected to the distributing manifold; each distributing branch† should be valved where it is connected to the distributing main, and each fixture branch‡ should be valved where it is connected to the distributing branch. Where a number of valves are clustered together, as for instance, near the distributing manifold, each valve should be provided with a brass tag stating what lines of pipe it controls, or else stamped with a letter or number which, by referring to a valve chart, will tell the line of pipe controlled.

Emptying-Pipes and Valves — In all systems of piping provision should be made to empty the pipes when the water is shut off. This is usually accomplished by placing valves in the distributing and circulating mains just above the distributing manifold and connecting them to emptying pipes discharging into a water supplied sink. The manner of connecting and valving emptying pipes can be seen in Figs. 95 and 96.

PUMPS

LIFT OR SUCTION PUMPS

Principles of Operation — The operation of a suction pump is dependent on and its efficiency limited by atmospheric pressure. If there were no atmospheric pressure there could be no suction lift to a pump. This is shown by a reference to the suction pump, Fig. 97, which consists of a piston, *a*, in a pump barrel or cylinder, *b*, a valve, *c*, that opens on the down stroke of the piston

Fig. 97

* Distributing Main — A pipe extending from distributing manifold to a group of fixtures or to a number of groups.

† Distributing Branch — A pipe extending from a distributing main to the several fixtures in a group.

‡ Fixture Branch — A pipe connecting a distributing branch to fixture, cock or faucet.

and closes on the up stroke, and a valve, *d*, that opens on the up stroke of the piston and closes on the down stroke. The operation of the pump is as follows: When the piston, *a*, makes an up stroke it exhausts some air from the suction pipe, *e*, and a sufficient quantity of water flows in to replace the exhausted air and balance the atmospheric pressure on the water outside. On the down stroke of the piston the exhausted air which has been confined in the pump cylinder escapes through the valve, *c*, which opens on the down stroke. The next up stroke of the piston still further exhausts air from the suction pipe and a still higher column of water flows in to replace the exhausted air. Repeated strokes of the piston exhaust all air from the suction pipe and pump cylinder, which then fill with water which is pumped out as was the air.

Lift of a Pump—Theoretically a pump will raise water a distance equal to the height that atmospheric pressure will balance a column of water in a perfect vacuum. Experience and experiment, however, have demonstrated that a pump will raise water only about .75 of the theoretical height. This difference between the theoretical and the actual lift of a pump is due to the loss of head caused by friction in the pipe, and the impossibility of securing a perfect vacuum on account of mechanical imperfections in the pump and connections, air in the water and vaporization of the water itself. The constant .75 holds true, however, only for water at ordinary temperatures. Any appreciable raise in the temperature of water will cause a corresponding loss of lift. This is due to the fact that in a vacuum water vaporizes at a lower temperature than when under pressure, and when air is exhausted from the suction pipe of a pump connected with a hot water tank or receiver, the water instantly flashes into vapor and fills the suction pipe, preventing the formation of a vacuum. Water of temperatures higher than 180 degrees Fahrenheit cannot be raised by suction but must flow into a pump by gravity. Waters of lower temperatures but over 100 degrees Fahrenheit are much easier handled when they

flow by gravity into the pump cylinder. The suction lift for waters of about 100 degrees Fahrenheit should never be over 7 feet, and for 160 degrees Fahrenheit not over 1 foot.

Atmospheric pressure varies with the elevation, that is, the distance above or the depth below sea level; hence on the side or top of a mountain the atmospheric pressure and consequently the lift of a pump will be less than at the sea level. Also, the atmospheric pressure and lift of a pump in a deep pit or mine will be greater than at sea level. The atmospheric pressure at sea level varies with the conditions of weather, but for practical purposes is taken as 14.7 pounds per square inch, and as 1 pound pressure will balance a column of water 2.309 feet high, it follows that in a perfect vacuum atmospheric pressure should balance a column of water $14.7 \times 2.309 = 33.95$ feet high. Atmospheric pressure at different altitudes with equivalent head of water and the vertical suction lift of pumps can be found in the following table:

TABLE XXXVII — SUCTION LIFTS OF PUMPS

Altitude Above Sea Level	Atmospheric Pressure per Square Inch	Equivalent Head of Water	Practical Suction Lift of Pumps
Sea Level . . .	14.70 pounds	33.95 feet	25 feet
¼ mile (1,320 feet)	14.02 pounds	32.38 feet	24 feet
½ mile (2,640 feet)	13.33 pounds	30.79 feet	23 feet
¾ mile (3,960 feet)	12.66 pounds	29.24 feet	21 feet
1 mile (5,280 feet)	12.02 pounds	27.76 feet	20 feet
1¼ miles (6,600 feet)	11.42 pounds	26.38 feet	19 feet
1½ miles (7,920 feet)	10.88 pounds	25.13 feet	18 feet
2 miles (10,560 feet)	9.88 pounds	22.82 feet	17 feet

In addition to the vertical lift, a suction pump will draw water horizontally an almost unlimited distance; nevertheless, when water must be conveyed any great distance, better results are obtained by using a *force pump* and placing it close to the source of supply.

FORCE PUMPS

Suction pumps are limited in the height to which they can deliver water by the atmospheric pressure at the

elevation where they are installed; furthermore, they cannot be used to circulate water through a closed circuit. Hence, when water must be elevated a considerable distance through closed pipes, as, for instance, in filling a house tank, a force pump must be used.

A simple hand force pump is shown in Fig. 98. It combines the functions of a lift pump with that of a force pump. Water is raised to the cylinder by suction as in a lift pump, but when the solid piston, *a*, descends, the confined water cannot escape to the top of the piston, as in the case of a suction pump, but is forced out through the valve, *b*, to the house tank or other place of supply. This pump is known as a single stroke pump, as it lifts and forces with each alternate stroke of the piston.

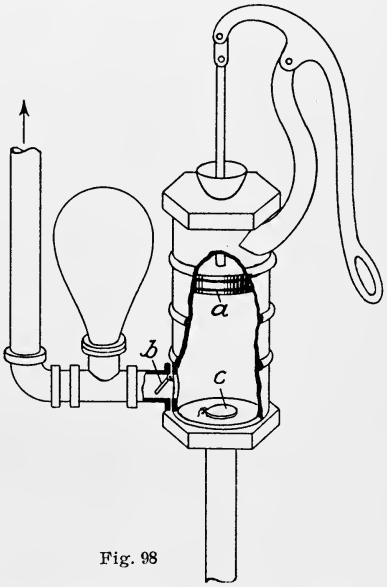

Fig. 98

Slip—At the end of the up stroke of the piston, the moment when it begins a down stroke, there is a brief interval of time during which both valves *b* and *c* are open, and during that time water flows back to the source of supply. This back flow of water is known as the *slip* of a pump. It increases with the height of the lift of the suction, the height to which the water is forced and the slowness of the valves in seating. When the vertical lift of a pump is small but the suction is long and the pump forces against a low head, the momentum of the moving column of water sometimes carries it forward while both valves are open; such a flow is known as the *negative slip* of a pump. The slip of a pump is a limiting factor in its capacity; when the slip is great the capacity of a pump

will be correspondingly decreased, and when the negative slip is great the capacity of the pump will be greatly increased over its theoretical capacity.

Air Chambers—When a force pump is operated it alternately sets in motion and brings to rest the entire moving column of water. As water is practically incompressible, the sudden starting and stopping of the column will cause water hammer that is both annoying to occupants of a house as well as damaging to the pump and pipes. This water hammer can be practically overcome by using an air chamber on the discharge pipe and so locating the air chamber that it will remain full of air and receive the initial impulse of the water. An air chamber not only prevents water hammer but also equalizes the flow between strokes of the piston. On large power pumps an additional air chamber should be placed on the suction pipe close to the pump. When pumps are operating under high pressures the air is soon absorbed from the air chambers which are thus rendered useless unless some means are provided for recharging them. A simple contrivance for charging air chambers of steam pumps is shown in Fig. 99. The air chamber and water cylinder of a pump are connected together through a gate valve, *a*, pipe, *b*, and a check valve, *c*, that opens towards the air chamber. Another check valve, *d*, that opens towards the pump is screwed to the pipe as shown. The standpipe, *b*, stands partly full of water. Then with the valve, *a*,

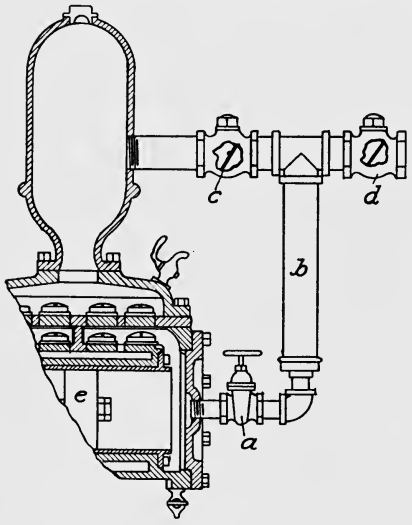

Fig. 99

properly throttled, when the water piston, *e*, makes a stroke to the left, some of the water will be drawn into the cylinder, and air will enter check valve, *d*, to take its place. On the reverse stroke of the piston, water is forced into the pipe, *b*, and as the confined air cannot escape through the check valve, *d*, it is forced into the air chamber thus keeping it charged.

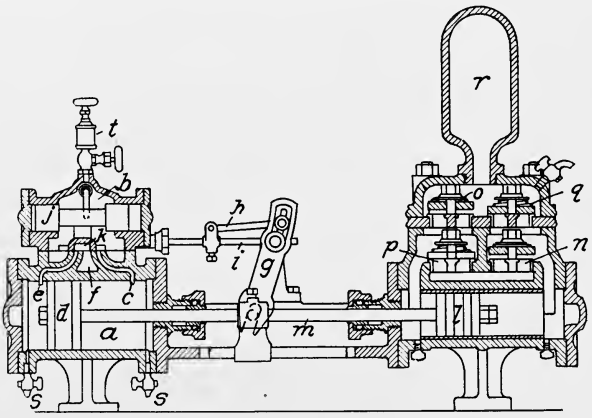

Fig. 100

STEAM PUMPS

Single Direct-acting—The type of steam pump most commonly used for house pumps is a single direct-acting pump shown in Fig. 100. The operation of the pump is as follows: Steam enters the cylinder, *a*, from the steam chest, *b*, through the port, *c*, and pushes the piston, *d*, to the left, the steam exhausting from the left side of the piston through the port, *e*, and exhaust, *f*, to the atmosphere. When the piston has almost reached the end of its stroke, the arm, *g*, link, *h*, and rod, *i*, reverse the auxiliary piston *j*, and slide valve, *k*, so that steam is now admitted to the left side of the piston through port, *e*, and as the piston travels to the right the exhaust steam escapes through port, *c*, and exhaust, *f*, to the atmosphere. The reciprocating motion of the steam piston is transmitted to the pump piston, *l*, in the water end of the pump by

means of the piston rod, *m*, to which it is direct connected. Then, as the pump piston travels to the left, water flows through the suction valve, *n*, into the pump cylinder, while the water to the left side of the piston is forced through the valve, *o*, into the discharge pipe. On the reverse stroke of the piston, water flows through the suction valve, *p*, into the pump cylinder, while water on the right side of the piston is forced out through discharge valve, *q*, into the discharge pipe. An air chamber, *r*, on top of the valve chamber reduces shock from water hammer and promotes steady flow. Two drip cocks, *s s*, serve to drain water of condensation from the steam cylinder and a lubricator, *t*, oils the working parts in the steam chest. This pump is known as a double stroke pump, as it both lifts and forces with each stroke of the piston. For low pressure service the piston in the water end of a pump may be packed with a fibrous packing; for high pressure service, however, the packing should be of metal.

Capacity of Pumps—The diameter of cylinder for a single-acting pump required to deliver a certain quantity of water per minute can be found by the formula:

$$d = \sqrt{\frac{g}{.034\ l\ n}}$$

In which l = length of stroke in feet
g = number of gallons to be delivered per minute
n = number of strokes per minute
d = diameter of pump in inches

EXAMPLE—What diameter of pump plunger will be required to discharge 114 gallons of water per minute; speed of pump, 90 strokes; length of stroke, 1 foot?

SOLUTION—Substituting values given in the example,

$$d = \sqrt{\frac{114}{.034 \times 1 \times 90}} = 6.1 \text{ inch diameter.—Answer.}$$

When the diameter of a cylinder and the length of piston travel per minute are known, the quantity of water a pump will discharge can be found by the formula:

$$q = l\ a\ s$$

In which q = cubic feet of water delivered per minute
l = length of stroke in feet
a = area of piston or plunger in feet
s = number of strokes per minute

EXAMPLE—What will be the discharge in cubic feet per minute from a single direct-acting pump with water piston 6 inches in diameter and length of stroke 8 inches, when running at a speed of 30 strokes per minute?

SOLUTION—The area of a 6-inch piston is .2 square foot. An 8-inch piston stroke equals .666 foot. Then,

$.666 \times 30 \times .2 = 3.99$ cubic feet of water per minute.—Answer.

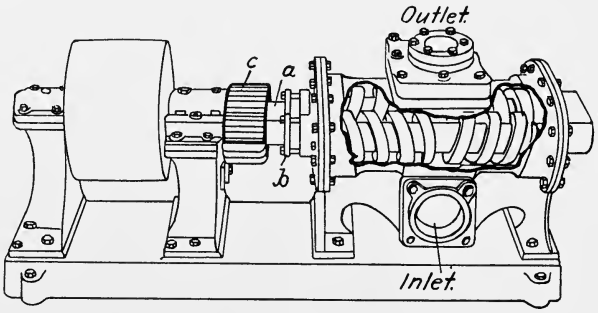

Fig. 101

HOUSE PUMPS

Quimby Screw Pump—Electrically driven pumps are now extensively used in connection with domestic water supplies to raise water to the house tank. A type of electrically driven pump extensively used is the Quimby Screw Pump, shown in Fig. 101. This type of pump is suited principally to forcing water and not to raise it by suction; hence to operate successfully it should be set at such a level that water will flow into it by gravity. When water does not flow to the pump by gravity, the suction pipe should be made short and straight as possible, and should be provided with a foot valve. The four screws that act as pistons in propelling the water are mounted in pairs on parallel shafts and are so arranged that in each pair the thread of one screw projects to the bottom of the space between the threads of the opposite screws. The pump

cylinder fits the perimeters of the threads closely without actual contact, and the faces of the intermeshing threads make a close running fit without bearing on and wearing the face of the screws. There is no end thrust on the screws in their bearings, because the back pressure of the column of liquid is delivered to the middle of the cylinder and the endwise pressure upon the screws in one direction is exactly counterbalanced by a like pressure in the opposite direction. The suction opens into a chamber underneath the pump cylinder and the liquid passes through this chamber to the two ends of the cylinder, and is forced from the two ends towards the center by the action of the two intermeshing pair of threads, and thence out through the discharge port to the house tank. The power to drive the pump is applied to the main shaft, *a*, and part of it is transmitted to the auxiliary shaft, *b*, by the gears, *c*.

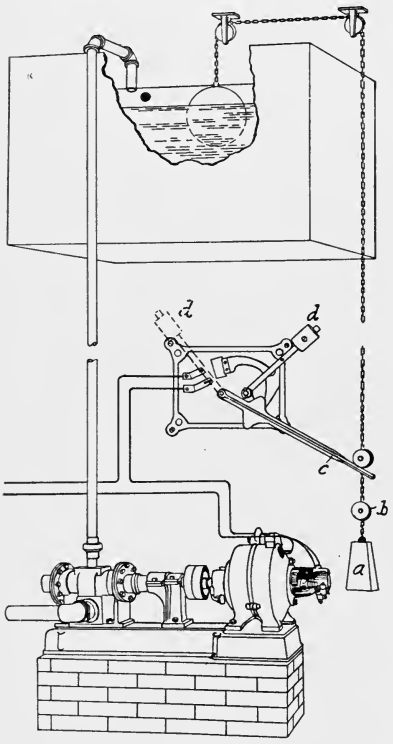

Fig. 102

Pumps for house service are usually fitted up to work automatically. The manner of so connecting a Quimby Pump is shown in Fig. 102. The pump is operated by a direct connected electric motor that is controlled by a weighted float in the house tank. When water in the tank is low, the weighted float raises the chain and counterweight, *a*, until the disc, *b*, trips the switch lever, *c*, throwing the contact bar, *d*,

over, as shown by dotted lines, to close the circuit and turn the electric current on to the motor. Then, as the tank fills with water, the float raises and the counter-weight pulls down on the chain until the upper disc trips the lever, *c*, thus breaking the circuit and shutting off current from the motor. By adjusting the two discs the pump can be made to operate under the slightest loss of head in the tank, but it is better to so place the discs that they will close the switch when the tank is almost empty and open it when the tank is full. This avoids frequently starting and stopping the pump and insures a frequent change of water in the tank.

Screw pumps run at speeds ranging from 900 to 1,400 revolutions per minute, according to their size and the service under which they operate. Direct current 110, 220 or 500-volt motors of General Electric, Crocker-Wheeler or Sprague types, are found most satisfactory for this work. The size, capacities, etc., of Quimby Pumps can be found in the following table:

TABLE XXXVIII—SIZE AND CAPACITY OF QUIMBY PUMPS

Size	Gallons per Minute	Gallons per Hour	Head in Feet	Horse-power of Motor	Piping		Extreme Width	Extreme Length	Extreme Height	Approximate Net Weight
					Suction Inches	Discharge Inches				
2	8⅓	500	100	½	1¼	1	18	42	18	325
2-A	6⅔	400	200	1	1¼	1	24	48	18	425
2½	16⅔	1,000	100	1	2	1½	24	54	18	525
2½-A	13⅓	800	200	2	2	1½	24	54	24	675
3	34	2,000	80	2	2½	2½	24	60	24	975
3-A	30	1,800	160	3	2½	2½	30	66	30	1,100

Electrically driven pumps of the plunger type are also used for house service pumps. Pumps of this type, however, should be provided with a rheostat or starting box to turn the current on to the motor gradually. If the full current were turned on instantly the armature would probably be burned out; also the pounding due to suddenly starting in motion a large column of water might

injure some of the more delicate working parts of the pump.

Hot Air Pumping Engines are extensively used for supplying water to country or suburban residences, and in tall apartment houses to pump water from the service pipe to the house tank on the roof. This type of pump can be operated by any kind of fuel and requires no skilled help to run it. In suburban localities, where a hydraulic ram or a windmill would not be practicable, a hot air pumping engine will prove the next least expensive to operate.

Suction Tanks.—If large steam pumps, such as are used for fire pumps and to fill house tanks on tall buildings, were allowed to pump water direct from the city mains, they would cause considerable annoyance while operating by reducing the pressure and thus decreasing the flow of water in other supply systems in the neighborhood. Furthermore, the operation of the pump might cause water ram in the mains that would be annoying to other water consumers and damaging to the water supply system. For these reasons, also to store a supply of water on the premises to provide against shortage should water be temporarily shut off from the street mains, suction tanks should be provided in all large buildings.

Suction tanks usually consist of an open steel tank covered with wooden planking. Sometimes, however, they are enclosed rectangular steel tanks with a manhole and hinged cover, through which access may be had to the interior of the tank.

The supply pipe, *a*, to suction tanks (Fig. 103) is generally so very large that a ball cock of the full calibre of the pipe would be subjected to too severe a strain, hence large sizes of supply pipes are usually provided with a manifold header so the inlet to the tank can be automatically supplied through several ball cocks, *b*, as shown in the illustration. Suction pipes from suction tanks to house pumps are usually cross-connected to the street supply, so in case of emergency, as for instance

during a fire, water can be pumped direct from the city mains. Suction tanks should have sufficient capacity to store at least one day's supply of water for the entire building; when space permits, it is better to provide capacity for two days' storage. This quantity will tide over any probable period of time that water will be shut off from the street mains.

House tanks are used to store water for the supply of buildings and should be located at least ten feet above the level of the highest fixture to be supplied. There are two kinds of tanks commonly used, wooden tanks and iron tanks. When located outside of buildings on roofs or in other exposed positions, wooden tanks are generally used; when located inside of buildings, iron tanks are generally used. During warm weather moisture condenses on the outside of iron tanks, and if not cared for will drip to the floor and wet both floor and ceiling below. To prevent this a drip pan should be placed under all iron tanks and a drip pipe from the pan extended to some convenient sink or connected to the overflow pipe from the tank.

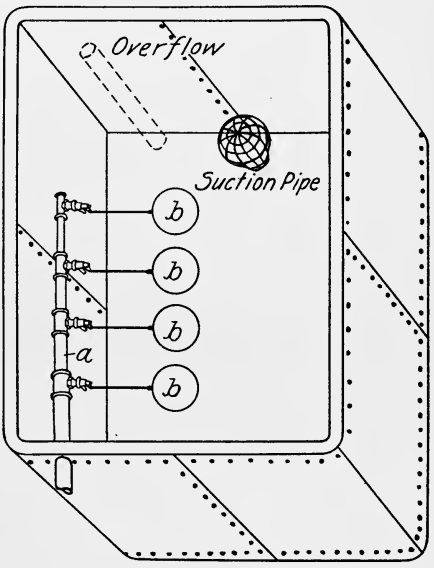

Fig. 103

Lead-lined wooden tanks were formerly extensively used, and in some localities are still, to a limited extent, but owing to the liability of carbonates or sulphates of lead being dissolved from the lining and poisoning the water,

lead should not be used for tank linings, particularly in localities where the water is soft.

Copper-lined wooden tanks are sometimes used. From a chemical standpoint, copper linings are not so objectionable as lead, particularly when the copper is tinned; however, copper linings present so many joints and seams that some of them are liable to leak, and, in some waters, soldered copper joints rapidly disintegrate, owing either to a chemical or galvanic action of the metals.

In extremely tall buildings, fixtures on the lower floors are supplied with water direct from the street mains; the upper floors are supplied with water from the house tank on the roof, and intermediate tanks are installed, so that not more than eight floors of the building are supplied with water from any one tank. In such installations the house supply from the roof tank should be cross-connected to the house supply from all the intermediate tanks and to the house supply for the lower floors, so that in case of necessity the entire building can be supplied with water from the house tank, which can be filled by pumping from the suction tank.

Storage tanks should be provided with overflow pipes of sufficient capacity to safely carry off the greatest quantity of water likely to be discharged by the supply pipe. It is a safe rule to allow for the overflow pipe twice the diameter or four times the sectional area of the supply pipe. Overflow pipes from tanks located on roofs of buildings may discharge onto the roof. Overflow pipes from tanks located inside of buildings should discharge into a properly tapped and water-supplied sink. Under no circumstance should they connect directly to the drainage system.

The size of storage tanks depends upon the number of people to be supplied. They should have sufficient storage capacity for one day's supply, to tide over possible periods of breakdown of pump or boiler. When figuring the capacity of storage tanks, 100 gallons of water per day per capita should be allowed in hotels, hospitals, apartment houses and public institutions.

The general arrangement of pipe connections to a house tank is shown in Fig. 104. The cleanout or emptying pipe is valved and connected to the overflow pipe. The house supply extends a few inches above the bottom of the tank to prevent sediment entering the pipe. Below the valve that controls the house supply is connected a vent pipe to admit air to the house supply and permit it to empty when the valve is shut off. A vapor or relief pipe from the highest point in the hot water supply system bends over the tank and thus permits the escape of steam. The pump may discharge into the house tank in the manner indicated when the pump is not controlled automatically. When it is, the pump pipe should enter the tank through the bottom and be controlled by a balanced float valve. A drip pan, *a*, under the tank and extending a few inches on all sides of it, catches the water of condensation and discharges it through the waste pipe, *b*, into the overflow pipe. When a tank is supplied with water by a pump that is not automatic in operation, a tell-tale pipe should be run from a point in the tank about two inches below the level of the overflow pipe to the engineer's sink. Water flowing through the pipe then notifies the engineer when the tank is full.

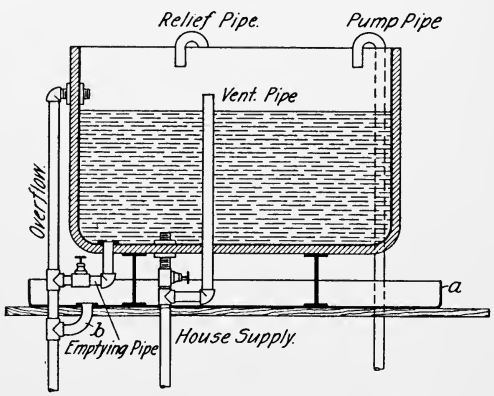

Fig. 104

Complete Mechanical Equipment—An illustration of the complete mechanical equipment of a water supply system in a building supplied with street and tank pressure is shown in Fig. 105. Two separate water service pipes from mains in different streets are cross-connected before being

connected to the meter, so that water from either or both street mains can be used. The meter is shown bi-passed. Some water supply companies will not permit a bi-pass around a meter, and where such a rule prevails another meter should be placed on the bi-pass. From the meters the water passes to the filters, which are so connected that they may be used either separately or both together. A bi-pass is provided around the filters, so water can be sup-

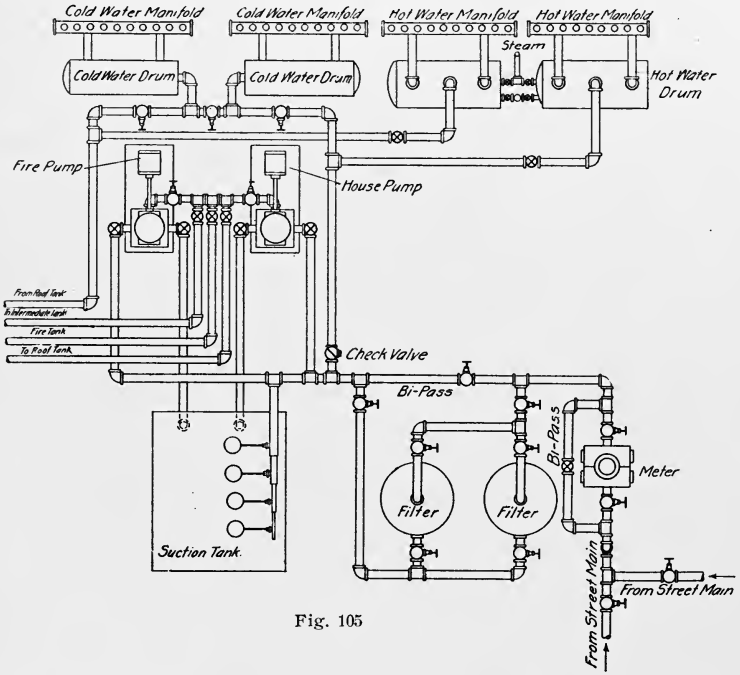

Fig. 105

plied direct to the building without filtration. After leaving the filters, one branch of the house main is connected to the cold water air chamber and distributing manifold for the lower floors, another branch supplies the hot water tank for the lower floors, another branch supplies the suction tank through four ball cocks, and the remaining two branches are connected to the suction pipes of the two pumps, so they can pump direct from the city water mains.

The pumps are also connected by suction pipes to the suction tank from which they generally draw water. The supply pipe from the house tank is connected to the supply pipe from the street, at a point between the two cold water drums. A valve is there provided so that in case of necessity water from the house tank can be turned on to the lower water supply system. A check valve is placed where marked on the illustration, to prevent water from the house tank running off into the street mains or returning to the suction tank.

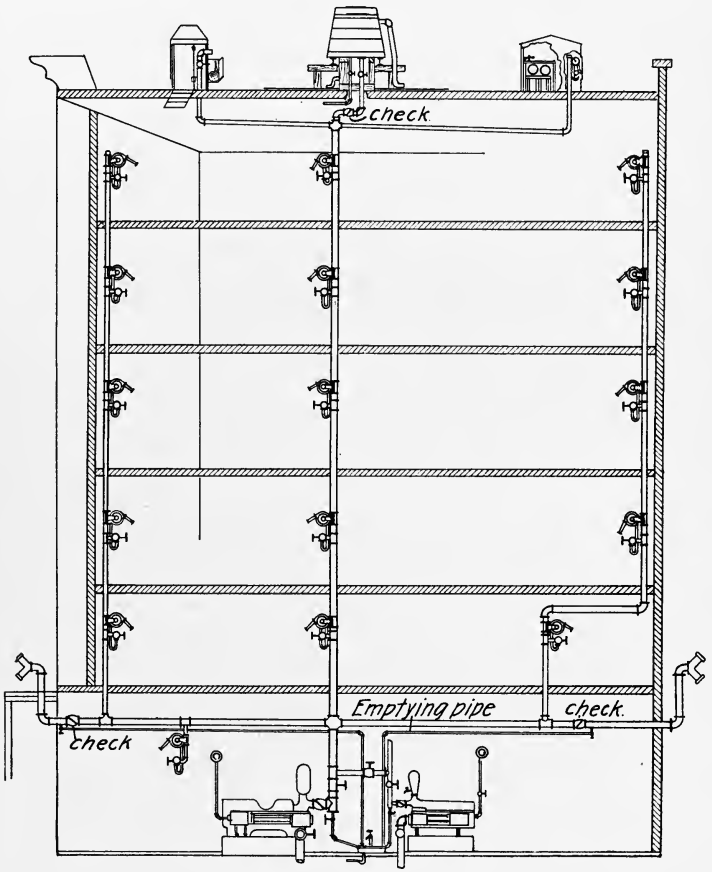

Fig. 106

FIRE LINES

System of Installation—Fire lines are now generally installed in all large buildings. A typical arrangement of pipes for fire service is shown in Fig. 106. In this system the lines are cross-connected, so that either the fire pump, the house pump, or both pumps can supply water in case of fire. A house tank on the roof keeps the lines full of water and provides a temporary supply while the pumps are being started. Branch lines extending through the building walls to the street terminate with siamese twin connections, through which water from street hydrants or fire engines can be forced into the system. The fire system is well supplied with soft seat check valves, so that water supplied from one source cannot be lost through other outlets. A check valve in the line of pipe connected to the tank prevents water from filling and overflowing the tank when supplied from pumps or twin connections. Checks in the lines leading to the twin connections prevent the loss of water from these outlets when water is supplied from either the pump or the tank, and check valves in the pump pipe relieve the pump valves of the pressure of water in the system. Emptying pipes are provided to drain the entire system, and separate pipes are provided to empty and thus prevent water freezing in the portions of pipe between the check valves in the cellar and siamese twin connections in the street. At each floor of the building 2½-inch outlets are left, to which are attached soft seat angle hose valves with 50 to 75 feet of underwriters' linen hose coiled on a reel or folded on a rack.

Sizes of Standpipes—For fire lines standpipes should be proportioned to the number of hose outlets they supply. The size of opening in hose nozzle for hose of 2½ inches diameter seldom exceeds 1¼ inches in diameter, and if allowance of the sectional area of a 2-inch pipe be made for each hose outlet in the building, both sufficient volume and pressure will be provided to throw an effective fire stream when all the nozzles are being used.

Range of Fire Streams—The extreme distance water

TABLE XXXIX—RANGE OF FIRE STREAMS

PRESSURE AT NOZZLE GIVEN, SHOWING PRESSURE AT HYDRANT, AMOUNT OF WATER DISCHARGED AND DISTANCE THROWN (EXTREME DROPS) THROUGH SMOOTH NOZZLE, USING 100 FEET 2½-INCH RUBBER HOSE. COMPILED FROM ACTUAL TESTS BY JOHN R. FREEMAN, HYDRAULIC ENGINEER, BOSTON, MASS.

Pressure at Nozzle, Pounds		30	40	50	60	65	70	75	80	85	90	95	100
¾-inch Nozzle	Pressure at hydrant	32	43	54	65	70	75	81	86	92	97	102	108
	Gallons per minute	90	104	116	127	132	137	142	147	151	156	160	164
	Feet thrown horizontally, *d*	48	56	65	68	70	72	75	76	77	80	82	85
	Feet thrown horizontally, *c*	96	112	125	136	141	145	149	153	157	161	164	167
	Feet thrown vertically, *b*	48	60	67	72	74	76	78	79	80	81	82	83
	Feet thrown vertically, *a*	59	78	93	104	109	114	119	123	126	129	132	134
1-inch Nozzle	Pressure at hydrant	37	50	62	75	81	87	94	100	106	112	118	125
	Gallons per minute	161	186	208	228	237	246	255	263	274	279	287	295
	Feet thrown horizontally, *d*	55	66	76	83	86	89	92	95	96	98	100	102
	Feet thrown horizontally, *c*	109	133	152	167	173	179	184	189	193	197	201	205
	Feet thrown vertically, *b*	51	64	73	79	82	85	87	89	91	92	94	96
	Feet thrown vertically, *a*	63	83	101	117	124	130	135	140	144	147	150	152
1¼-inch Nozzle	Pressure at hydrant	42	56	70	84	91	98	105	112	119	126	133	140
	Gallons per minute	206	238	266	291	303	314	325	336	346	356	366	376
	Feet thrown horizontally, *d*	58	71	81	89	92	95	98	101	105	107	109	212
	Feet thrown horizontally, *c*	115	142	162	178	185	191	197	203	209	214	219	224
	Feet thrown vertically, *b*	52	65	75	80	85	88	90	92	94	95	97	99
	Feet thrown vertically, *a*	64	84	104	122	130	136	142	146	150	153	156	158
1½-inch Nozzle	Pressure at hydrant	49	65	81	97	105	113	121	129	137	145	154	162
	Gallons per minute	256	296	331	363	377	392	405	419	432	444	456	468
	Feet thrown horizontally, *d*	60	74	85	93	96	100	103	106	110	112	115	118
	Feet thrown horizontally, *c*	119	148	169	186	193	200	207	213	219	225	231	236
	Feet thrown vertically, *b*	53	67	77	85	88	91	93	95	97	99	100	101
	Feet thrown vertically, *a*	66	86	107	126	133	140	145	150	154	157	159	161

can be thrown both horizontally and vertically, and the distance the streams will be effective for fire purposes under different heads and through different sizes of nozzles, are shown in Table XXXIX.

a equals average height reached by highest drops in still air.

b equals greatest height stream is effective for fire purposes.

c equals greatest distance of farthest drops in still air at level of nozzle.

d equals greatest distance stream is effective for fire purposes.

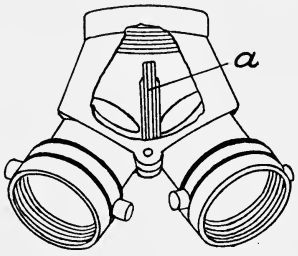

Fig. 107

A Siamese Twin Connection is shown in Fig. 107. A flap valve, *a*, closes one opening when pressure is applied to the other, and stands open as shown in the illustration when water is being forced through both openings.

Fire Hose—The most suitable hose for use in buildings

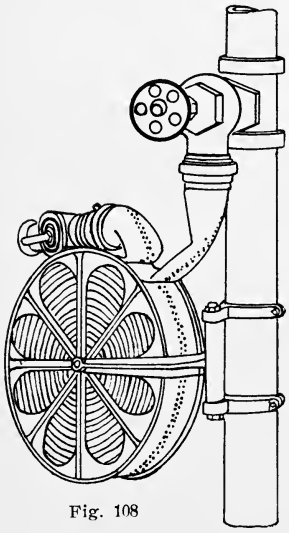

Fig. 108

is underwriters' linen hose. It will withstand almost any pressure likely to be subjected to and, being flexible, can be neatly coiled or folded into a very small space. The size of hose generally used for this purpose is 2½ inches diameter.

Hose Reels—Each length of hose should be neatly folded or coiled on a rack or hose reel provided for that purpose and attached to the wall or fire pipes close to the valve outlet. Hose racks crease the hose at each fold and for that reason are not so desirable as hose reels. A very satisfactory swing hose reel is shown in Fig. 108. It is supported from the fire standpipe by a hinged clamp that permits the reel to turn in many directions.

PURIFICATION OF WATERS

FILTRATION

RAPID SAND FILTRATION

Theory of Filtration—Water for municipal supply may be classed, according to the source from which it is obtained, as surface waters or as ground waters. Waters obtained from streams, rivers, lakes, or impounding reservoirs are surface waters; generally such waters are soft and when filtered are the best kind of waters for both domestic and for industrial purposes. As surface water exists in nature, however, it is never bacterially pure and is seldom clear; it generally carries considerable matter both in suspension and in solution and sometimes is contaminated by specific germs of disease. The amount of suspended matter in surface water varies considerably, being greatest after heavy rains which wash the finely divided soil and earth down into streams, lakes and reservoirs. Water that contains large quantities of matter in suspension is unsuitable for domestic and for most industrial purposes and should be filtered before using.

Filtration is both a straining and a biological process in which most of the suspended matter and part of the hardness, color, and organic matter in raw water are removed. This is effected by passing the raw water through a thick bed of fine sand that is covered by a still finer jelly-like layer which entangles and holds any suspended matter brought in contact with it. The efficiency of a filter depends largely on this jelly-like layer and a filter is not at its best until a suitable layer has formed. Under ordinary conditions to naturally form such a layer would take about twenty days, and to obviate such delay and bring a filter to its full bacterial efficiency in from twenty to thirty minutes, coagulants are used to artificially produce the jelly layer.

The coagulants generally used are sulphate of alumina (common alum) and sulphate of iron. When sulphate of

alumina is added to water it decomposes into its component parts, sulphuric acid and alumina; the sulphuric acid combines with lime, magnesia, or any other base present in the water, while the alumina forms a flaky precipitate that gathers together and holds whatever suspended matter it encounters, thus forming in a few hours a layer that without the use of coagulant would require weeks to form. The thicker the layer of sediment, the greater the bacterial efficiency of a filter, but usually after from twelve to twenty-four hours' operation, the sediment layer becomes so thick that sufficient water cannot pass through, and the filter bed must then be cleaned.

Gravity Type Filter—A filter of the subsidence gravity type is shown in Fig. 109. Unfiltered water, to which coagulant has been added, enters the subsidence basin beneath the filter and usually tangent to the circumference, as experiment has demonstrated that a rotary motion conduces to greater and more rapid sedimentation. From the subsidence basin water rises through the hollow vertical axis, *h*, and overflows to the filter bed through which it percolates to the system of under drains below. The copper float, *a*, in the filter tank automatically regulates the supply of water and thus maintains a uniform head, while the automatic controller, *e*, on the outlet or pure water pipe regulates the rate of filtration.

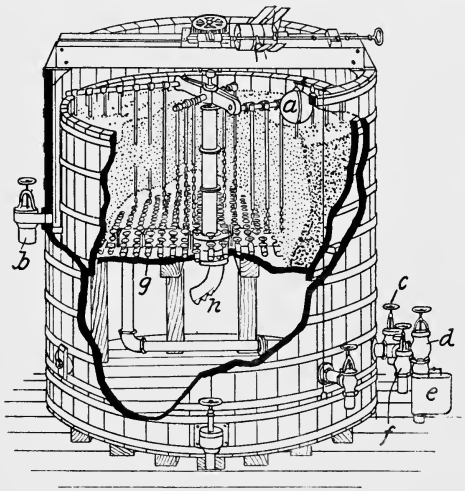

Fig. 109

When the filter bed is dirty it is cleaned by reversing the flow of water through the filter bed and thoroughly

loosening the sand. This is effected by pumping filtered water into the sand bed through the outlet pipe, and when the sand is thoroughly loosened revolving the iron rakes, thus breaking up the jelly layer on top of the sand and stirring up the entire filter bed so all the grains of sand will be exposed to the scouring action of the water. The wash water and dirt from the filter bed overflow the filter tank into the annular space between the two tanks, and is carried out through the valve *b* to the sewer. For a few minutes after a filter bed is washed, its efficiency is greatly lowered, so for a short time after starting the water is allowed to filter to waste through the valve *c*. After sufficient water has run to waste to insure a good filtrate, valve *c* is closed, valve *d* opened and filtered water discharged to the clear water tank through the controller, *e*. To clean the filter bed, valves *c* and *d* are closed, valve *f* opened and air and water alternately forced through the system of collectors, *g*, to the filter bed.

Coagulant Pump—To secure the best results the amount of coagulant used must be proportioned to the condition of the water; the amount varies from one-quarter grain to two grains per gallon, the exact amount for any water being determined by experiment. If sufficient coagulant is not fed to the raw water, it will result in an inferior filtrate, and if too much coagulant is used, it will not only increase the cost of operation, but coagulant will pass through the filter bed to the delivery mains. Some waters are so soft that insufficient base is present for coagulant to react upon. When such is the case a base, usually of lime, is also added to the raw water.

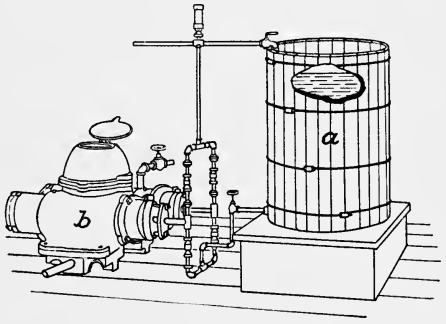

Fig. 110

To feed coagulant to the raw water, some form of pump or apparatus is required that will be automatic in operation and feed a measured quantity of coagulant proportional to the quantity of water. A meter pump for this purpose is shown in Fig. 110. A coagulant solution of the required strength is mixed in wooden coagulant tank, *a*, which is connected by feed pipes to a meter-actuated duplex pump, *b*.

TABLE XL—EFFICIENCY OF FILTERS

Date March, 1904	Hour	Bacteria per C. C		Percentage Reduction Efficiency Filters	Parts per Million						B. Coli. Communis		Amount of Ferrous Sulphate Used Grains per Gallon	Amt. of Caustic Lime Used. Grains per Gal.	Gallons of Water Filtered
		Applied Water	Filtered Water		Alkalinity		Ferrous Iron Fe. Filtered Water	Caustic Lime Ca O. Filtered Water	Chlorine Applied Water	Turbidity Applied Water	Applied Water	Filtered Water			
					Applied Water	Filtered Water									
7th	1.15 p.m.	76,860	248	99.67	78.0	77.0	None	None	17.5	200	Present	Absent	2.52	.64	3,498,600
7th	4.00 p.m.	93,330	310	99.66											
7th	5.00 p.m.	109,800	222	99.79											
7th	9.30 p.m.	97,720	198	99.79											
8th	11.00 a.m.	54,900	590	98.82	79.0	70.0	None	None	15.0	200	Present	Absent	2.96	.56	3,447,640
8th	1.00 p.m.	48,730	184	99.62											
8th	2.30 p.m.	46,810	280	99.40											
8th	5.30 p.m.	52,780	230	96.56											
9th	12.00 m.	27,450	230	99.16	81.0	70.0	None	None	14.0	140	Present	Absent	2.99	.56	3,493,700
9th	2.15 p.m.	26,460	94	99.64											
9th	4.00 p.m.	28,110	190	99.32											
9th	5.00 p.m.	27,840	130	99.53											
10th	7.00 a.m.	56,700	142	99.74	81.0	72.0	None	None	16.0	140	Present	Absent	2.62	.56	3,451,660
10th	8.20 a.m.	57,900	112	99.80											
10th	11.00 a.m.	55,800	184	99.67											
10th	2.00 p.m.	53,760	210	99.60											
11th	1.00 p.m.	40,530	104	99.74	82.0	78.0	None	None	14.5	130	Present	Absent	2.80	.57	3,441,800
11th	5.00 p.m.	38,760	128	99.66											
11th	7.00 p.m.	35,400	72	99.79											
11th	9.30 p.m.	33,300	96	99.71											
12th	4.00 p.m.	46,710	140	99.70	84.0	82.0	None	None	18.0	60	Present	Absent	2.67	.60	3,312,400
12th	5.00 p.m.	47,700	38	99.92											
12th	7.00 p.m.	48,600	116	99.75											
12th	9.00 p.m.	49,830	134	99.73											
Avge.		52,292	182	99.65	81.0	74.8	None	None	15.8	145	Present	Absent	2.76	.58	3,424,300

REMARKS—Filtered water in perfect physical condition, being free of turbidity and color and very brilliant and sparkling. Average rate, 110,010,000 gallons per acre.

As will readily be seen, this has been a week of bad water. The large number of bacteria in the applied water, in connection with large sewage contamination, have made obligatory a larger use of chemicals than is necessary under normal conditions. Turbidity and chlorine contents have also been high.

With sulphate of iron at $9.00 per ton and caustic lime at $5.00 per ton, the chemical cost for the week would average $1.77 for iron and 21 cents for lime; total, $1.98 per 1,000,000 gallons filtered.

It has been shown by rather extensive experiments conducted at this station that to accomplish the same work with alum there is required fully as much alum as iron sulphate, and with high turbidities a trifle freer use of alum obtains. It is probable, therefore, that an average use of 3 grains of alum per gallon would have been necessary to get the same percentage reduction. With alum at $20 per ton, the cost would have been $4.25 per million filtered, or a saving of $2.30 per 1,000,000 gallons filtered in favor of the iron process.

(Signed) C. ARTHUR BROWN, Superintendent.

March 20, 1904.

The meter measures the quantity of raw water passing through; the raw water operates the pumps which discharge a proportional quantity of solution into the raw water. All working parts of a pump or other coagulant apparatus should be made of bronze to withstand the corroding effects of sulphate of alumina or sulphate of iron, which energetically attacks and destroys iron.

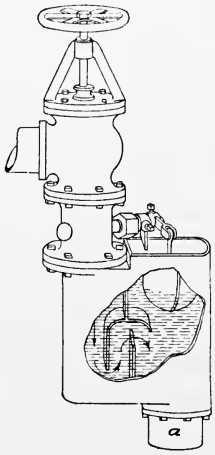

Fig. 111

Filtration Controllers—After filter beds have been cleaned the rate of filtration, for a while, is much faster than at other times, and is often too great for efficient results. Under working conditions an excessive rate of filtration might disturb the jelly layer and permit raw water to pass through with but little filtration. To regulate the rate of filtration, automatic controllers, Fig. 111, are now generally used. In this type of controller the outlet is fitted with removable bushings that regulate the discharge to the desired velocity; if the rate of filtration then becomes greater than can be discharged, water will fill the controller box and raise the float, thus throttling the balance valve and reducing the flow to the required rate.

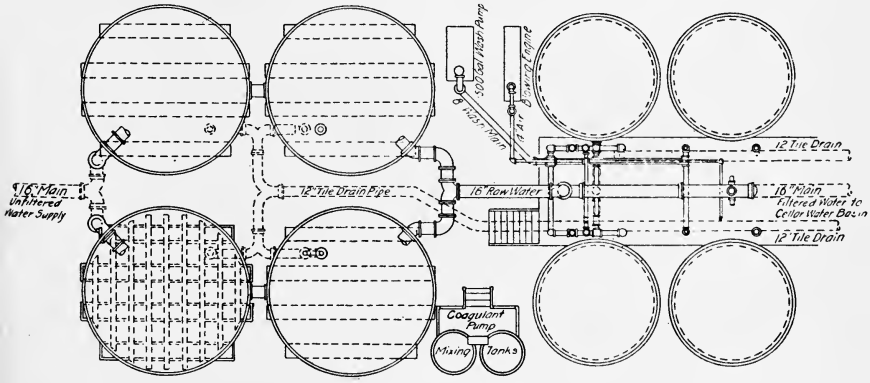

Fig. 112

Efficiency of Gravity Filters—The bacterial efficiency of gravity filters depends upon the use of coagulants. If clear water for industrial purposes is wanted, it may be had by filtering through sand without coagulant, but for domestic water supply, where bacterial purity is required, coagulants must be used. The tabulated report of chemical and bacterial tests of gravity water filters, at Lorain, Ohio, for week ending March 12, 1904 (see Table XL), will serve to show the efficiency of rapid sand filters.

The standard sizes, weights, capacities, etc., of the Jewell Subsidence Gravity Filter can be found in Table XLI.

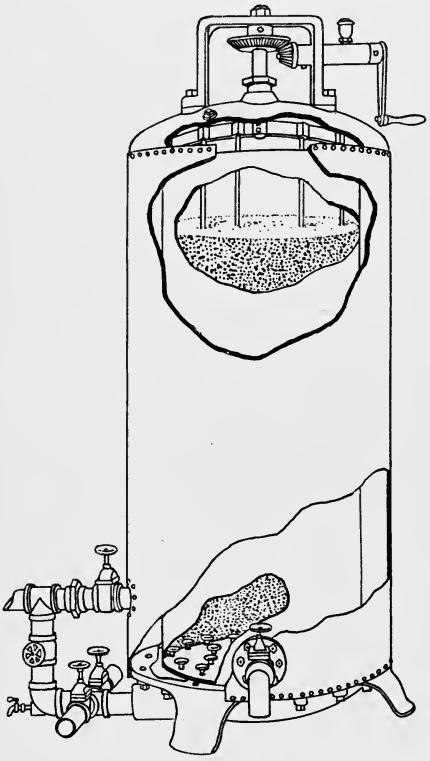

Fig. 113

A plan of a filter house for a small city plant, showing the layout of filters, piping and apparatus, is illustrated in Fig. 112.

Pressure filters are enclosed in water-tight chambers, so that water can be driven through the filter bed by hydraulic pressure. A Jewell pressure filter of the settling basin type is shown in Fig. 113. This filter is constructed and operated similar to the Jewell gravity type, from which it differs only by being enclosed in a water-tight case. Pressure filters are not as efficient as gravity filters, but owing to the ease with which they can be attached to a water supply system they

are extensively used for house filters. Usually pressure filters are connected to the service pipe in the cellar, and all water used in the building passes through them. When so installed they should be provided with a by-pass to permit unfiltered water being supplied to fixtures in the build-

TABLE XLI—DIMENSIONS AND CAPACITY OF JEWELL GRAVITY FILTERS

Size		Connections, in Inches		Capacity				Area	Bed	Shipping Weights (Approximate)			Total Wgt.
Diameter in Feet				Minimum and Maximum, U. S. Gallons									
Filter Bed Tank (Inside)	Main Tank (Outside)	Supply and Discharge Pipe	Washout Pipes	Minute	Hour	Day 24 Hours	Settling Basin	Effective Filtering Surface, Sq. Feet	Filtering Material Cubic Feet	Machine Work Pounds	Tank Material Cypress or Cedar Cwt.	Filtering Material Tons	Filter in Operation Tons, about
6	7	3	6	47- 94	2,800-5,600	62,500-125,000	1,500	28	113	1,000	50	5	15
8	9¼	4	6	82-164	5,000-10,000	120,000-240,000	2,600	50	200	1,800	70	9	28
10	11½	4	8	130-260	7,800-15,600	185,000-370,000	4,000	78	312	2,500	105	14	45
12	13½	5	8	188-376	11,300-22,600	250,000-500,000	5,750	113	452	3,750	125	20	70
14	15½	6	8	255-510	15,300-30,600	365,000-730,000	8,000	153	612	5,000	145	27	100
17	18¾	6	8	376-752	22,600-45,200	500,000-1,000,000	11,500	226	904	9,500	180	40	145
21	22¾	8	2- 8	565-1,130	33,900-67,800	750,000-1,500,000	17,000	339	1,356	12,000	220	60	200
24	26	10	2-10	753-1,506	45,200-90,400	1,000,000-2,000,000	23,000	452	1,808	17,000	300	80	295

Standard height of filters, 14 feet. Depths of filter beds, 4 feet.

ing in case the filter is cut out. The bacterial efficiency of pressure filters like that of gravity filters depends upon the use of coagulants. When water is to be used for manufacturing purposes, however, a clear filtrate can be obtained without coagulants. An automatic apparatus is used to feed coagulant to pressure filters. The standard sizes, capacities, weights and dimensions of Jewell pressure filters, with settling basins, can be found in Table XLII.

SOFTENING OF WATER

Economy of Soft Waters—Throughout the Mississippi Valley and in other parts of the United States where municipal water supplies are obtained from artesian wells drilled to the underlying St. Peter or Potsdam sandstone, the water is permanently, and in some localities, both temporarily and permanently hard. This is due to the fact that in those regions the geological formation of the upper strata is limestone, and in percolating through the lime-

TABLE XLII—DIMENSIONS AND CAPACITY OF JEWELL PRESSURE FILTERS

Size	Connections		Capacity			Area	Height	Space	Bed	Weight (Approximate)			Test
			Minimum and Maximum, U S. Gallons							Shipping			
Nominal Diameter, Inches	Supply and Discharge Pipes, Ins.	Washout Pipes Inches	Per Minute	Per Hour	Per Day 24 Hours	Effective Filtering Surface, Sq. Feet	Extreme Height in feet over all, about	Approximate Floor Room Required, Feet	Actual Quantity of Filtering Material Cubic Feet	Filter Connections, etc. Pounds	Filtering Material Pounds	Gross Weight of Filter in Operation, Tons	Pressure Pounds per Square Inch
12	¾	1	1¼–2½	75–150	1,800–3,600	¾	6	1½ x 2	2	300	150	½	75
18	1	1¼	3½–7	225–450	5,000–10,000	1½	6	2 x 3½	4	550	350	1	100
24	1¼	1½	5–10	300–600	7,000–14,000	3	6	2½ x 3	7½	800	600	1½	100
36	1½	2	11–22	700–1,400	16,000–32,000	7	8	3 x 4	17	1,900	1,400	3	100
48	2	2½	20–40	1,200–2,400	28,000–56,000	12	9	4 x 5	30	2,500	2,500	5	100
60	2½	3	30–60	1,900–3,800	45,000–90,000	19	9	5 x 6	48	4,000	4,000	7	100
72	3	4	45–90	2,800–5,600	65,000–130,000	28	9	6 x 7½	68	5,000	5,600	10	100
84	4	5	63–126	3,800–7,600	90,000–180,000	38	9	7½ x 9	94	7,000	7,800	15	100
96	4	6	83–166	5,000–10,000	120,000–240,000	50	9	9 x10	120	9,000	10,000	20	100
120	5	6	120–240	7,800–15,600	180,000–360,000	78	9	11 x12	192	12,000	16,000	35	100

stone, the water, which originally was soft, dissolves from rock, carbonates or sulphates of lime or magnesia. The solvent capacity of water for carbonates and sulphates of lime is greater when the water is cold, therefore, deep well waters in limestone regions usually are saturated with lime or magnesia, and when heated in water tanks or boilers to a temperature greater than 140 degrees Fahr., the point of saturation is lowered and lime is precipitated or liberated and forms a hard scale or incrustation in waterbacks and boilers. The effect of boiler incrustation is to shorten the life of a boiler and decrease the efficiency of the apparatus while in service.

It is accepted by good authority that:

$\frac{1}{16}$-inch lime scale means a loss of 13 per cent. of fuel.
⅛-inch lime scale means a loss of 22 per cent. of fuel.
¼-inch lime scale means a loss of 38 per cent. of fuel.
⅜-inch lime scale means a loss of 50 per cent. of fuel.
½-inch lime scale means a loss of 60 per cent. of fuel.
¾-inch lime scale means a loss of 91 per cent. of fuel.

These values are probably a little high, but making due allowance for inaccuracies the table still serves to show the enormous waste of coal due to boiler incrustation.

Incrustation of waterbacks and water heaters not only decreases their efficiency while in service, but is also a source of expense for repairs. In limestone regions water-

backs and heaters become choked with lime and require cleaning at certain intervals of time ranging from one to six months.

In the household, the increased consumption of soap to soften hard water is a further item of expense. The amount of commercial soap required for this purpose, with waters of different degrees of hardness, can be seen by the following table:

TABLE XLIII—SOAP REQUIRED TO SOFTEN WATER

Gallons of Water	1° Hardness. Soap Pounds	3° Hardness. Soap Pounds	4° Hardness. Soap Pounds	8° Hardness. Soap Pounds	12° Hardness. Soap Pounds	16° Hardness. Soap Pounds
100	0.119	0.357	.476	.952	1.428	1.904
1,000	1.19	3.57	4.76	9.52	14.28	19.04
10,000	11.90	35.7	47.6	95.2	142.8	190.4
100,000	119.00	357.	476.	952.	1428.	1904.
1,000,000	1190.00	3570.	4760.	9520.	14280.	19040.

Many industrial concerns, like breweries, paper mills and laundries require soft water, not only for boiler feed, but also for industrial purposes, and use some modification of the Clark-Porter water softening process.

The Clark process consists of adding lime water to temporarily hard water to remove the carbonates of lime or magnesia. The lime acts upon the bicarbonates in the hard water, releasing the extra carbonic acid gas required to form the bicarbonates, and precipitates the carbonates of lime which are insoluble.

The Porter process consists of adding soda ash to permanently hard water to remove the sulphates of lime and magnesia, and stirring up the treated water with paddles to mix it. When soda ash is added to permanently hard water, it reacts upon the sulphates of lime and magnesia, decomposes them and forms insoluble carbonates which are precipitated.

The reagents generally used in water softening are caustic lime (common quick lime) and soda ash. Other reagents can be used, but the above are generally selected

on account of their cheapness and because they are readily obtainable in any market.

Water Softening Apparatus—An apparatus for softening water consists of a mixing chamber for the chemical reagents, a settling basin for the treated water after the reagent is added and a filter to remove from the softened water the base acted upon by the chemical.

There are two general arrangements of apparatus for softening water. One arrangement is known as the closed or pressure system, and the other arrangement, as the gravity system.

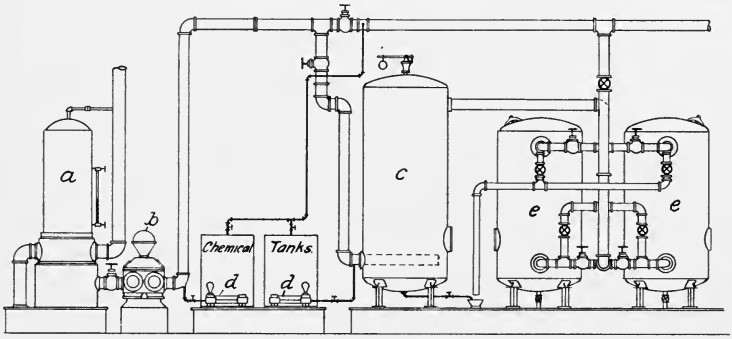

Fig. 114

The general arrangement of the Scaife pressure system as used for softening feed water for boilers is shown in Fig 114.

Feed water enters the open heater, *a*, where some of the temporary hardness is removed by raising the temperature to 200 or 210 degrees Fahr., thus driving off some of the free carbonic acid gas and precipitating carbonates of lime and magnesia on removable pans inside of the heater. From the heater the water is forced by the boiler feed pump, *b*, into a large precipitating tank, *c*, where the chemical reagents are introduced by means of two small pumps, *d*, *d*. In the precipitating tank most of the remaining carbonates and sulphates of lime and magnesia are precipitated; some of the lighter particles, however, are carried in suspen-

sion to the filters, *e*, *e*, where along with other impurities they are removed.

When this system is used for industrial or for domestic purposes, the heater and feed water pumps may be omitted and the hard water discharged directly into the precipitating tank. When the heater is omitted, however, a large quantity of reagent is required.

A gravity apparatus for water softening is shown in Fig. 115. In this system of treatment, lime is slacked in the trough, *a*, after which it is emptied into the saturator, *b*, where it can be diluted to the required consistency and be kept agitated by revolving paddles. In a tank, *c*, a solution of soda ash is prepared, which, like the lime solution, is agitated by revolving paddles operated by the water motor, *d*. Lime solution is fed to the raw water through pipe *e*, and soda solution is fed to the raw water through pipe *f*. By means of an automatic proportional water motor, a measured quantity of water and proportional amounts of either lime, soda, or both

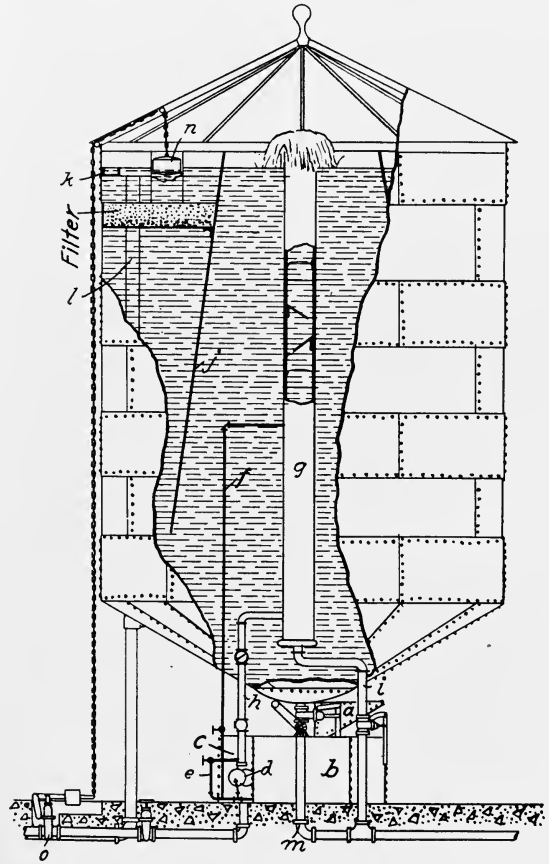

Fig. 115

lime and soda, are introduced into the standpipe, *g*, the water flowing in through pipe, *h*. Baffle plates in the standpipe thoroughly mix and agitate the treated water, thus aiding precipitation. The lime deposited in standpipe, *g*, is washed out through the valved pipe, *i*. The treated water overflows the top of the standpipe, passes under the baffle plate, *j*, up through the filters and overflows through trough, *k*, and pipe, *l*, to a collecting or storage reservoir. Sludge from precipitation in the tank settles to the cone-shaped bottom and is washed out through pipe, *m*. A float, *n*, controls the supply valve, *o*, thus making the apparatus automatic in operation.

When the water to be treated is obtained from a stream or other surface source where the conditions of the water are not uniform, it is better to use an intermittent type of apparatus. By this system a large quantity of water is put in a tank and treated; while that tank is being emptied, a second tank is filled, the water tested and the right proportion of reagent mixed to treat it. In this manner each tank of water is separately tested and the correct proportion of chemicals added.

HOT WATER SUPPLY

WATER HEATING APPARATUS

PROPERTIES OF HEAT

Transfer of Heat—When two bodies of different temperatures are near each other a transfer of heat takes place from the hotter to the colder body. This tendency towards maintaining an equilibrium of temperature is universal and the transfer of heat may take place in any of three ways, by *conduction*, by *convection* or by *radiation*.

Conduction is the progressive movement of heat through a substance without perceptible movement of the molecules; if one end of a poker is held in a fire, the other end will become heated by conduction. Water in a waterback or vessel becomes heated from the flames and hot gases of a fire by conduction of heat through the metal walls of the waterback or vessel.

Convection is the transfer of heat by movement or circulation of the molecules of the substance to be heated. Water in a vessel placed on a stove is heated by local circulation of the water. Fluids, such as air or water, can be heated only by convection. This is due to the fact that when heat is applied to a fluid, the particles in contact with the heat expand in bulk, consequently become lighter in weight and are replaced by colder and denser particles.

Radiation is the transmission of heat from a warm body to one of lower temperature. For example, the earth is warmed by radiation from the sun. Radiant heat does not heat the air through which it passes; it travels directly and in straight lines until intercepted and reflected or absorbed by some other body. The cooler body will reflect or absorb all the heat rays it intercepts and the sum of the absorption and reflection equals the total of the intercepted rays.

Absorption and radiation are equal and opposite. The better the absorptive power of a substance the better radiating material it would make. Lampblack, which has absorbing and radiating powers rated at 100, is taken

TABLE XLIV—ABSORPTION AND RADIATION

Substance	Powers	
	Radiating or Absorbing	Reflecting
Lampblack	100	0
Water	100	0
Carbonate of lead	100	0
Writing paper	98	2
Marble	93 to 98	7 to 2
Isinglass	91	9
Ordinary glass	90	10
Ice	85	15
Cast iron	25	75
Wrought iron, polished	23	77
Steel, polished	17	83
Tin	15	85
Brass, cast, dead polished	11	89
Brass, hammered, dead polished	9	91
Brass, cast, bright polished	7	93
Brass, hammered, bright polished	7	93
Copper, varnished	14	86
Copper deposited on iron	7	93
Copper, hammered or cast	7	93

as the standard of comparison. In proportion as the reflecting power of a substance diminishes, its power to absorb or radiate heat increases. The absorbing, radiating and reflecting capacity of various substances are given in Table XLIV.

Measurement of Heat—The amount of heat transmitted to water is measured by the **British Thermal Unit** usually abbreviated B. T. U. A B. T. U. is the quantity of heat required to raise the temperature of one pound of water from 62 to 63 degrees Fahr. In practice it is taken as the quantity of heat required to raise one pound of water 1 degree Fahr.

Measurement of Temperature—The temperature of water is measured by a mercury thermometer. For measuring water temperatures, thermometers, Fig. 116, should have a scale ranging from 60 degrees Fahr. to 270 degrees Fahr., and should be so constructed that when screwed

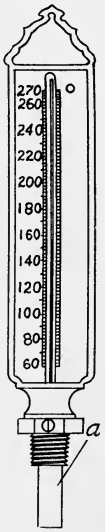

Fig. 116

CALIFORNIA

into a fitting the mercury bulb, *a*, will project into the pipe and thus be in contact with the hot water.

Transmission of Heat—The quantity of heat transmitted to water through a vessel or tube depends on the difference in temperature between the heating medium and the absorbing water, the thickness of the walls of the vessel or tube, and the material of which it is made. All other conditions being equal, copper pipes will transmit 50 per cent. more heat than iron pipes, and cast iron surfaces will transmit about 60 per cent. less than an equal area of iron pipe surface. The relative transmission of heat for different metals is shown in Table XLV.

TABLE XLV—TRANSMISSION OF HEAT

Experimenters	Character of Surface	Steam condensed per square foot per degree difference of temperature per hour		Heat transmitted per square foot per degree difference of temperature per hour		Remarks
		Heating Pounds	Evaporating Pounds	Heating B.T.U.	Evaporating B.T.U.	
Laurens	Copper coils	.292	.981	315	974	
Laurens	2 Copper coils	....	1.20	....	1120	
Laurens	Copper coil	.268	1.26	280	1200	
Perkins	Iron coil	....	.24	....	215	100 lbs. Pressure
Perkins	Iron coil	....	.22	....	208.2	10 lbs. Pressure
Box	Iron tube	.235	....	230		
Box	Iron tube	.196	....	230		
Box	Iron tube	.206	....	207		
Havrez	Cast iron boiler	.077	.105	82	100	

Kent's Pocketbook

From the above table of experiments, the following table of average heat units transmitted through various substances is adduced. The table is based on the assumption that the outer surface is clean and free from soot or ashes, and that the inner surface is free from incrustations of lime or other substances.

TABLE XLVI—TRANSMISSION OF HEAT

Materials	Heat transmitted per square foot of heating surface each hour for each degree Fahr. difference between the heating medium and the water
Copper plate	275 B. T. U.
Copper pipe	300 B. T. U.
Wrought iron or steel pipe or surface	200 B. T. U.
Cast iron surface	80 B. T. U.

Temperature of Fires—Temperature tests of a fire by observation can be told in a fairly exact manner by Table XLVII.

TABLE XLVII—TEMPERATURE OF FIRES

Appearance of Fire	Approximate Temperature, Fahr.
Red, just visible	About 977 degrees
Red, dull	About 1290 degrees
Dull red, cherry	About 1470 degrees
Red, full cherry	About 1650 degrees
Red, bright	About 1830 degrees
Orange, dull	About 2010 degrees
Orange, bright	About 2190 degrees
White heat	About 2370 degrees
White, welding	About 2550 degrees
White, dazzling	About 2730 degrees

PROPERTIES OF HOT WATER

Expansion of Water—When water at or above the temperature of 39.1 degrees Fahr. is heated, it expands in volume. The temperature 39.1 degrees Fahr. is known as the point of *maximum density*. When water is at a lower temperature the application of heat causes it to contract in bulk and the application of cold causes it to expand.

The expansion, weight, density and comparative volume of pure water at different temperatures can be found in the following table:

TABLE XLVIII—COMPARATIVE VOLUME AND DENSITY OF WATER AT DIFFERENT TEMPERATURES

(Calculated by means of Rankine's approximate formula)
(D. K. CLARK)

Temperature	Comparative Volume	Comparative Density	Weight of 1 cubic foot	Remarkable Temperatures
Degrees Fahr.	Water at 32° = 1	Water at 32° = 1	Pounds	
32	1.00000	1.00000	62.418	Freezing Point.
35	0.99993	1.00007	62.422	
39.1	0.99989	1.00011	62.425	Point of maximum density.
40	0.99989	1.00011	62.425	
45	0.99993	1.00007	62.422	
46	1.00000	1.00000	62.418	Same volume and density as at the freezing point.
50	1.00015	0.99985	62.409	
52.3	1.00029	0.99971	62.400	Weight taken for ordinary calculations.
55	1.00038	0.99961	62.394	
60	1.00074	0.99926	62.372	
62	1.00101	0.99899	62.355	Mean temperature.
65	1.00119	0.99881	62.344	
70	1.00160	0 99832	62.313	
75	1.00239	0.99771	62.275	
80	1.00299	0.99702	62.240	
85	1.00379	0.99622	62.182	
90	1.00459	0.99543	62.133	
95	1.00554	0.99449	62.074	
100	1.00639	0.92365	62.022	Temperature of condenser water.
105	1.00739	0.99260	61.960	
110	1.00889	0.99119	61.868	
115	1.00989	0.99021	61.807	
120	1.01139	0.98874	61.715	
125	1.01239	0.98808	61.654	
130	1.01390	0.98630	61.563	
135	1.01539	0.98484	61.472	
140	1.01690	0.98339	61.381	
145	1.01839	0.98194	61.291	
150	1.01889	0.98050	61.201	
155	1.02164	0.97882	61.096	
160	1.02340	0.97714	60.991	
165	1.02589	0.97477	60.843	
170	1.02690	0.97380	60.783	
175	1.02906	0.97193	60.665	
180	1.03100	0.97006	60.548	
185	1.03300	0.96828	60.430	
190	1.03500	0.96632	60.314	
195	1.03700	0.96440	60.198	
200	1.03889	0.96256	60.081	

TABLE XLVIII—Continued

Temperature	Comparative Volume	Comparative Density	Weight of 1 cubic foot	Remarkable Temperatures
Degrees Fahr.	Water at 32° = 1	Water at 32° = 1	Pounds	
205	1.0414	0.9602	59.93	
210	1.0434	0.9584	59.82	
212	1.0444	0.9575	59.76	Boiling point by formula
212	1.0466	0.9555	59.64	Boiling point by direct measurement.
230	1.0529	0.9499	59.26	
250	1.0628	0.9411	58.75	
270	1.0727	0.9323	58.18	
290	1.0838	0.9227	57.59	
298	1.0899	0.9175	57.27	Temperature of steam of 50 lbs. effective pressure per square inch.
338	1.1118	0.8994	56.14	Temperature of steam of 100 lbs. pressure per square inch.
366	1.1301	0.8850	55.29	Temperature of steam of 150 lbs. pressure per square inch.
390	1.1444	0.8738	54.54	Temperature of steam of 205 lbs. effective pressure per square inch.

The increase in bulk of a given quantity of water can be found by the formula,

$$v=\frac{oc}{q}$$

In which v=final volume of water
o=original volume of water
c=comparative volume of water at final temperature
q=comparative volume of water at original temperature

EXAMPLE—What will be the final volume in a vessel containing 40 gallons of water at 62 degrees Fahr. when raised to a temperature of 200 degrees Fahr.?

SOLUTION—In Table XLVIII it will be seen that the comparative volume of water at 62 degrees Fahr. is 1.00101 and at 200 degrees Fahr. 1.03889. Substituting those values in the formula,

$$V=\frac{40\times 1.03889}{1.00101}=41.51 \text{ gallons final volume.}$$ Answer.

The contraction in bulk of a given quantity of water can be found by the formula, $V=\frac{oc}{q}$ as in the former case, with this difference, however, that the original temperature and volume in this case is the higher one, while the final temperature and volume is the smaller one.

EXAMPLE—What will be the final volume of 41.514 gallons of water that is cooled from 200 degrees Fahr. to 62 degrees Fahr.?

SOLUTION—$\frac{41.514\times1.00101}{1.03889}=40$ gallons. Answer.

Boiling Point of Water—The temperature at which water boils varies with the pressure. In a vacuum of 13.69 pounds below atmospheric pressure water boils at a temperature of 102.018 degrees Fahr. At atmospheric pressure, which is generally taken as 14.7 pounds per square inch, water boils at 212 degrees Fahr. At 15.31 pounds pressure above atmospheric pressure water boils at a temperature of 250.293 degrees Fahr. The relation between the boiling temperature of water and the pressure is absolute; pressure cannot be increased without also increasing the temperature of the boiling point of the water, nor can the temperature of the boiling point of the water be increased without increasing the pressure. The temperature and pressure of boiling water and the temperature and pressure of the steam in contact with it are always equal.

The relative pressure and temperature of boiling water and steam, also the volume of steam at that pressure compared to the volume of water of which it is composed can be found in Table XLIX.

Circulation of Water—Water is a poor conductor of heat. It cannot be heated by conduction or by radiation. If heat is applied to the top of a vessel of water, but slight rise of temperature will result. Water must be heated by circulation or convection, and to cause the water to circulate the heat must be applied at the lowest part of the containing vessel.

If heat is applied to the bottom of a vessel of water, the water immediately begins to circulate. The water

directly above where the heat is applied is heated by conduction, expands in bulk, consequently becomes lighter. It is then displaced by the cooler and denser water surrounding it, which in turn becomes heated and is displaced by the surrounding water; thus establishing local circulation of the water inside of the vessel.

TABLE XLIX—BOILING POINT OF WATER

Absolute Pressure in pounds per square inch	Boiling point of water, degrees Fahrenheit	Ratio of volume of steam to volume of equal weight of distilled water at temperature of maximum density	Pressure above vacuum in pounds per square inch	Boiling point of water, degrees Fahrenheit	Ratio of volume of steam to volume of equal weight of distilled water at temperature of maximum density
1	2	3	1	2	3
1	102.018	20623	46	275.704	563.0
2	126.302	10730	48	278.348	540.9
3	141.654	7325	50	280.904	520.5
4	153.122	5588	52	283.381	501.7
5	162.370	4530	54	285.781	484.2
6	170.173	3816	56	288.111	467.9
7	176.945	3302	58	290.374	452.7
8	182.952	2912	60	292.575	438.5
9	188.357	2607	62	294.717	425.2
10	193.284	2361	64	296.805	412.6
11	197.814	2159	66	298.842	400.8
12	202.012	1990	68	300.831	389.8
13	205.929	1845	70	302.774	379.3
14	205.604	1721	72	304.669	369.4
14.69	212.000	1646	74	306.526	360.0
15	213.067	1614	76	308.344	351.1
16	216.347	1519	78	310.123	342.6
17	219.452	1434	80	311.866	334.5
18	222.424	1359	82	313.576	326.8
19	225.255	1292	84	315.250	319.5
20	227.964	1231	86	316.893	312.5
22	233.069	1126	88	318.510	305.8
24	237.803	1038	90	320.094	299.4
26	242.225	962.3	92	321.653	293.2
28	246.376	897.6	94	323.183	287.3
30	250.293	841.3	96	324.688	281.7
32	254.002	791.8	98	326.169	276.3
34	257.523	748.0	100	327.625	271.1
36	260.883	708.8	105	331.169	258.9
38	264.093	673.7	110	334.582	247.8
40	267.168	642.0	115	337.874	237.6
42	270.122	613.3	120	341.058	228.3
44	272.965	587.0			

If in place of a vessel of water a U-shaped tube, Fig. 117, be used and the ends of the loop connected at the top, as shown in the illustration, the water will rise in the leg of the tube to which the heat is applied, and will descend in the other leg to replace the ascending column of water. This establishes a continuous movement of the entire volume of water in the tubes in the direction of the arrows. This movement is known as circulation in a circuit. That is what occurs when water in a storage tank or range boiler is heated from a waterback or water heater.

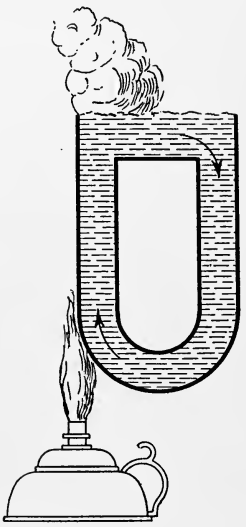

Fig. 117

The velocity of circulation in a circuit depends upon the temperature to which the water is heated and the height of the circuit. Thus with a hot fire and a high loop the velocity of flow would be much greater than with the same loop and a slow fire or with a hot fire and a low loop. The chief cause retarding circulation is friction, therefore short radius bends, contracted waterways, small pipes and unreamed pipe ends should be avoided when installing hot water supply systems.

Waterbacks—The hollow casting forming part of the fire-box lining of kitchen ranges, and through which water circulates and is heated for storage in the range boiler, is commonly known as a waterback. In most waterbacks a horizontal partition, *a*, Fig. 118, gives the water a posi-

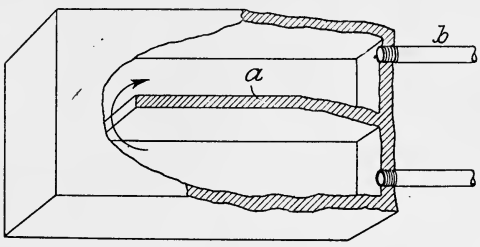

Fig. 118

tive circulation through the casting and prevents a commingling of waters of different temperatures, as is the case where waterbacks without this partition are used. It is quite important that the opening for the flow pipe, *b*, be drilled close to the top wall of the casting, so that the hottest water can flow from the waterback and not cause a rattling sound by being retained in the waterback to form steam.

Water Heating Coils—In ranges that are not provided with waterbacks, heating coils are sometimes made to supply the deficiency. Usually they consist of two pieces of one-inch black iron pipe joined at one end by a return bend. The free ends are then extended through the wall of the fire-box, so they can be connected to the boiler. The chief objection to the use of water heating coils is the fact that their effect on the draft of the stove or on the heating capacity of the oven can never be pre-determined, consequently ovens are often spoiled for baking purposes by placing a water coil in a range not designed to accommodate one.

Capacity of Waterbacks and Coils—The capacity of waterbacks and coils depends upon the materials of which they are made, the thickness of metal forming their walls, the location of the waterback or coil in the fireplace, their freedom from soot, ashes or incrustation of lime or magnesia, and the intensity of the fire to which they are exposed. Under favorable conditions a coil made of copper pipe will transmit 300 B. T. U. per hour, a wrought iron or steel pipe, 200 B. T. U. per hour, and a cast iron waterback, 80 B. T. U. per hour per square foot, for each degree Fahr. difference in temperature between the flames or hot gases in contact with the waterback or coil and the water inside. As a matter of fact, however, waterbacks and coils transmit only about 25 per cent. of their possible capacity. This is due to the fact that they are placed in the fire-box in the position least likely to affect the stove for other purposes, and therefore are not exposed to the hottest coals and gases of the fire. Furthermore, they are

partly covered by ashes, soot and dying coals, and in the case of cast iron waterbacks, the walls usually are of too great thickness to transmit the maximum amount of heat. In many cases waterbacks and coils are coated with incrustations of lime or magnesia that still further reduce their transmitting capacities. Cast iron waterbacks, under ordinary conditions, will heat from ordinary temperature to 212 degrees Fahr. from 25 to 35 gallons of water per hour for each square foot of exposed surface. With an ordinary fire, one square foot of exposed waterback surface will heat about 25 gallons of water per hour, while with a fire such as is used for baking or roasting, one square foot of surface will heat about 35 gallons of water per hour.

However, the average size of waterback contains only 110 square inches or about ⅔ square foot of exposed surface, and water for domestic uses is seldom heated to above the temperature of 180 degrees Fahr., therefore an ordinary waterback with an average fire will heat from ordinary temperature to boiling point about 17 gallons of water per hour, or from ordinary temperature to 180 degrees Fahr. about 21 gallons of water per hour, while with a fire such as is used for cooking or baking it will heat 23 gallons of water to the boiling point, or 27 gallons of water to a temperature of 180 degrees Fahr. Wrought iron pipes will heat from 30 to 40 gallons of water under the same conditions, and copper pipes will heat from 45 to 60 gallons per hour for each square foot of surface exposed to the fire. In calculating the heating capacity of a waterback or coil, the average temperature of the water is taken; thus, if water at 60 degrees Fahr. is heated to 200 degrees Fahr., the average temperature of the water would be $60 + 200 \div 2 = 130$ degrees Fahr., and the range of temperature through which it is heated would be $200-60 = 140$ degrees Fahr.

Water Heaters—A magazine feeding water heater, such as is used for heating large quantities of water in apartment houses, barber shops, bathing establishments, etc., is shown

in section in Fig. 119. It consists simply of a combustion chamber surrounded by an annular space through which water circulates and is heated from the flames and hot gases within. Heaters of this type are made having capacities of from 50 to 600 gallons per hour, and larger sectional heaters of different types are made with capacities up to several thousand gallons per hour. The heater shown in the illustration has a magazine feed. This consists simply of a tube in the center of the heater that holds several hours' supply of coal and automatically feeds it to the fire. It can be made into a hand-fired heater by removing the magazine.

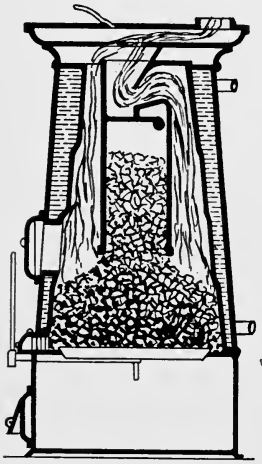

Fig. 119

Capacity of Water Heaters—The capacity of a water heater depends upon the amount of coal it can efficiently burn during a given period of time, and the conductivity and thickness of the walls of the fire-box. Boiler iron is a better conductor of heat than cast iron, therefore a boiler iron heater of given surface will heat more water in an hour than will a cast iron heater of equal surface, the amount of coal burned and the intensity of the fire in both cases being equal. The amount of coal economically burned in a heater depends upon the area of grate and size of the smoke flue. Heaters burn from 3 to 6 pounds and will probably average 4 pounds of coal per hour per square foot of grate surface. The total heat of combustion of a pound of coal of average composition is 14.133 B. T. U. Of this amount, however, a large percentage passes up the chimney as hot gases, so that under ordinary conditions only about 8000 B. T. U. are actually transmitted to the water. Therefore, in calculating the capacity of a heater, the area of grate surface, amount of coal efficiently burned and the available B. T. U. in a pound of coal are

the limiting factors. Architects and plumbers should determine for themselves, by calculation, the heating capacity of a heater, and not rely upon manufacturers' ratings. This is made necessary by the lack of uniformity among manufacturers in the rating of their heaters, which differ from one another in some cases over 100 per cent. for equal area of grates. Some part of that percentage might be accounted for by the difference of construction, which gives some heaters greater heating surface than others, but, making due allowance for the improved design of some heaters, they will invariably be found overrated, while the run of heaters are overrated from 20 to 50 per cent. The capacity of heaters can be calculated by means of the rule or formulas following:

When the quantity of water to be heated per hour is known, the size of grate required can be found by the following rule:

RULE—Multiply the weight of water in pounds by the number of degrees rise in temperature and divide the product by the number of pounds of coal burned per hour per square foot of grate surface, by the number of heat units transmitted to the water from 1 pound of coal. The result will be the area in square feet of grate required.

Expressed as a formula:

$$g=\frac{W\,t}{C\,u}$$

In which W=weight in pounds of water to be heated
t=degrees Fahr. water is to be raised
C=pounds of coal burned per hour per square foot of grate
u=units of heat absorbed by water from each pound coal
g=area of grate in feet.

EXAMPLE—What size of grate will be required to heat 300 gallons of water per hour from 62 to 212 degrees Fahr., 1 gallon weighing 8.3 pounds?

SOLUTION—$\frac{300\times8.3\times(212-62)}{6\times8000}=7.7$ sq. ft. grate surface. Ans.

In the above solution 6 pounds of coal was assumed as the consumption per square foot of grate surface because the maximum rating of the heater is desired.

The capacity of a water heater of known dimensions can be ascertained by the following rule:

RULE—Multiply the consumption of coal per square foot of grate surface by the number of B. T. U. transmitted to the water from each pound of coal, by the number of square feet of surface in the grate, and divide the product by the weight of 1 gallon of water times the degrees of temperature the water is raised.

Expressed as a formula:

$$q = \frac{g\ c\ u}{p\ t}$$

In which g=size of grate in square feet
c=pounds of coal burned per hour per square foot of grate surface
u=units of heat absorbed by the water from each pound of coal
p=8.3 weight of 1 pound of water
t=degrees Fahr. water is raised
q=quantity of water in gallons heated per hour

EXAMPLE—How many gallons of water can be heated from 62 to 212 degrees Fahr. in a heater with 7.7 square feet of grate surface?

SOLUTION—$\frac{7.7\times6\times8000}{8.3\times(212-62)} = 296$. Answer.

Garbage Burning Water Heaters are sometimes used in large institutions where they serve the double purpose of destroying refuse and heating water for domestic supply. A type of such water heater is shown in Fig. 120. Its distinguishing features are two grates, one an ordinary grate to burn coal or other fuel on, and the other a pipe coil through which water circulates and on which the garbage to be burned is placed. Where large quantities of combustible materials must be disposed of, such heaters are both efficient and economical.

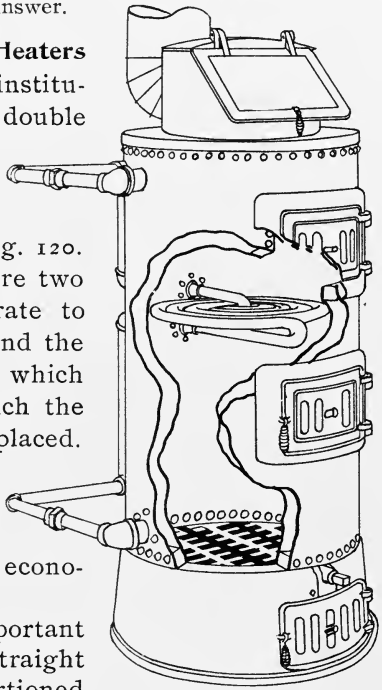

Fig. No. 120

Smoke Flues—It is important that a good chimney flue, straight and smooth inside and proportioned to the area of the grate, be provided for each water heater. No other smoke pipe should be permitted to connect to this flue, nor should other openings to it be permitted, as they would spoil the chimney draft.

Smoke flues should be cased with flue linings to give them a smooth interior surface. The best form for flue linings is round or oval, as smoke and hot gases pass up with less frictional resistance in a round flue than in a square one. Square flues are much more efficient than rectangular ones, on account of the less surface exposed for a given area of flue; for instance, a flue 12 x 12 inches has an area of 144 square inches and a perimeter of only 48 inches, while a flue 8 x 18 inches having an equal area, has a perimeter of 52 inches, thus presenting 4 additional inches to offer resistance. No satisfactory formula was ever devised to calculate the area of smoke flues under varying conditions. A simple empirical rule that will be found satisfactory for determining the area of flues for water heaters follows:

RULE—Allow for smoke flue one-eighth the sectional area of heater grate.

EXAMPLE—What size of smoke flue will be required for a water heater containing 4 square feet of grate?

SOLUTION—4 square feet=576 square inches. ⅛ of 576=72 square inches=area of smoke flue. The nearest sizes of commercial flue linings are: Square, 8½×8½ inches=72.25 square inches; round, 10^2 times .7584=78.54 square inches.

Incrustation of Water Heaters—An apparatus for automatically feeding soda ash or other precipitating chemicals to hard water is shown in Fig. 121. This apparatus is used in connection with waterbacks and water heaters to prevent them becoming choked by deposits of lime. When properly looked after an apparatus of this kind will precipitate so large a quantity of the lime or magnesia held in solution by the waters, that the periods

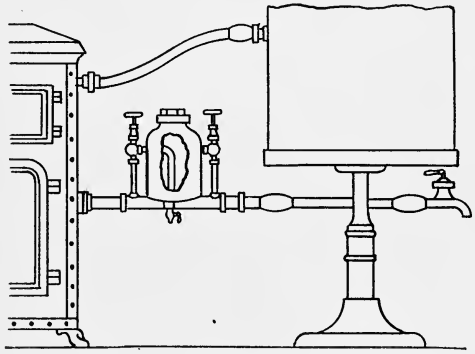

Fig. 121

between cleanings of waterbacks or heaters will be lengthened from 50 to 100 per cent.

The precipitating reagents are placed in this vessel, wetted, and the two valves opened sufficiently to give a flow through the apparatus proportioned to the amount of water flowing through the pipe. The apparatus then works automatically until the chemical reagent is exhausted. To secure satisfactory results the apparatus must be placed on the return pipe to the waterback as shown. All water is thus treated before reaching the waterback or heater.

Steam Coils—Water in tanks is sometimes heated by a steam coil immersed in the water. This method of heating has the advantage of requiring no care whatever, and saves the labor, expense and dirt of an extra fire. When exhaust steam is available the cost of heating water by the method is practically nothing.

A steam coil can be placed in either a vertical or in a horizontal tank, the only requirements being that the pipe used in the coil be large enough to take care of the water of condensation, and that it have a slight fall from the top connection where the steam enters to the bottom outlet towards which the water of condensation drains.

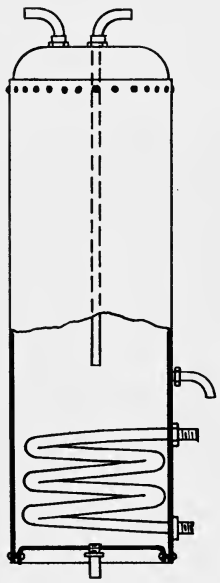

Fig. 122

In a vertical tank, Fig. 122, the steam coil is spiral and placed near the bottom. This type of coil is used principally in connection with kitchen ranges. Large size hot water tanks are usually placed in a horizontal position. Fig. 123 shows a method of placing a coil for high pressure steam inside of a hot-water tank. In this coil steam or the condensation travels through the entire length of coil. When exhaust steam is used,

however, a shorter course should be provided to minimize the back pressure on the engines. A heating coil for exhaust steam is shown in Fig. 124.

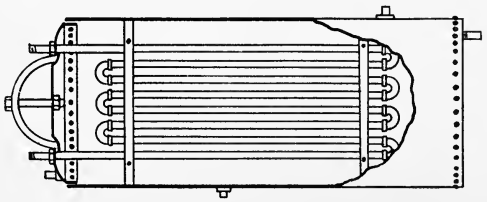

Fig. 123

Steam coils for tanks may be made of copper, brass or iron pipe. Copper and brass pipes last longer than iron and transmit more heat to the water per square foot of heating service. For these reasons, either copper or brass coils are preferable to iron pipe coils. The size of steam coil in square feet required to heat a certain quantity of water in a given time, can be found by the following rule:

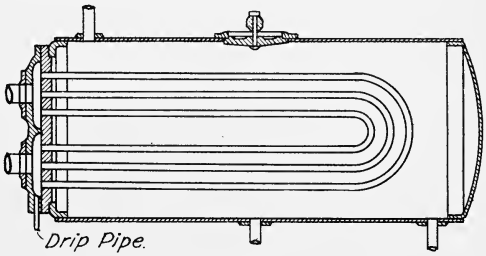

Fig. 124

RULE—Multiply the weight of water in pounds by the number of degrees temperature Fahr. the water is to be raised, and divide the product by the coefficient of transmission times the difference between the temperature of the steam and the average temperature of the water.

Expressed as a formula:

$$s=\frac{w\,r}{c\,(T-t)}$$

In which s=surface of copper or iron pipe in square feet
w=weight in pounds of water to be heated
r=rise in temperature of water
t=average temperature of the water in contact with coils
T=temperature of steam
c=coefficient of transmission

The value of c for copper is 300 B. T. U. and for iron 200 B. T. U. transmitted per hour per square foot of surface for each degree difference between the temperature of the steam and the average temperature of water.

In computing the heating surface of copper or iron pipe in steam coils, the inner circumference of the pipe must be taken, as that is the real heating surface to which heat is applied. The average temperature of the water in contact with the coil is taken as the temperature of the water.

EXAMPLE—How many square feet of heating surface will be required in a copper coil to heat 300 gallons of water per hour from 50 degrees to 200 degrees Fahr. with steam 15 pounds pressure?

SOLUTION—$300 \times 8.3 = 2490$ pounds of water to be heated

$200° - 50° = 150$ = rise in temperature of water

$150° \div 2 + 50° = 125°$ = average temperature of water

$250°$ = temperature of steam at 15 pounds gauge pressure (Table XLIX).

$250° - 125°$ = difference between temperature of steam and average temperature of water. Substituting these values in the formula:

$$s = \frac{2490 \times 150}{300 \times (250 - 125)} = 9.9 \text{ square feet of coil. Answer.}$$

Some convenient constants for steam coils that produce approximations sufficiently accurate for most purposes follow. The values will be found safe:

W = gallons water to heat per hour
W ÷ 10 = square feet iron pipe coil required for exhaust steam
W ÷ 15 = square feet copper coil required for exhaust steam
W × .07 = square feet iron pipe coil for 5 pounds pressure steam
W × .045 = square feet copper pipe coil for 5 pounds pressure steam
W × .05 = square feet iron pipe coil for 25 pounds steam pressure
W × .035 = square feet copper pipe coil for 25 pounds steam pressure
W × .04 = square feet iron pipe coil for 50 pounds steam pressure
W × .025 = square feet copper pipe coil for 50 pounds steam pressure
W × .03 = square feet iron pipe coil for 75 pounds steam pressure
W × .02 = square feet copper pipe coil for 75 pounds steam pressure

Taking the foregoing example for comparison, the nearest value to 15 pounds steam is 25 pounds, and the coefficient for copper pipe at this temperature is .035. Hence, $300 \times .035 = 10.5$ square feet. Answer.

Heating Water by Steam in Contact—The quickest and most economical way to heat water with steam is to bring the steam into direct contact with the water. This method is used extensively to heat water in swimming pools, vats for industrial purposes, dish washing, etc., and

is usually accomplished by forcing steam through a perforated pipe or steam nozzle located near the bottom of the tank and submerged by the water. When perforated pipes are used for this purpose they should be of brass or copper to prevent corrosion, and the combined area of the perforations should be at least eight times the area of pipe to equal it in capacity. Exhaust steam from pumps, engines or other apparatus that is liable to contain oil or grease, is not suitable for this purpose.

When steam is brought in contact with water in an open vessel steam bubbles are formed, rise toward the surface and collapse with a report. For this reason water is heated by steam in direct contact through perforated pipes only when noise is not objectionable.

Noiseless Water Heaters—A steam nozzle for noiselessly heating water by steam in direct contact is shown in Fig. 125. This apparatus consists of an outward and upward discharging steam nozzle covered by a shield which has numerous openings for the admission of water, so that the jet takes the form of an inverted cone, discharging upwards.

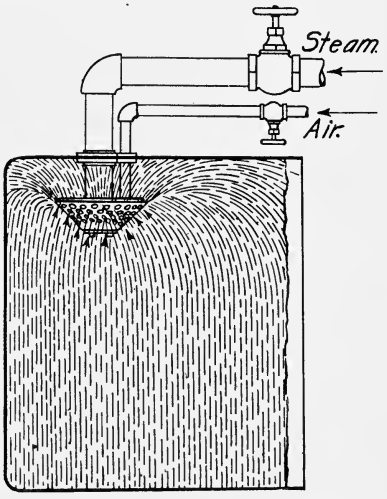

Fig. 125

Air, admitted through a small pipe, is drawn in by the jet, and by mixing with the steam prevents the sudden collapse of bubbles and the consequent noise which is such a great objection to heating by direct steam in the old way. A valve or cock on this air pipe regulates the air to the quantity most desirable.

If water is to be heated to a less temperature than 165

degrees Fahr. the air pipe is not used, as the heater will operate noiselessly without it. If, however, the temperature of the water is to be raised above 165 degrees Fahr. an air pipe must be used. A pressure of air is not required in the air pipe when the pressure of steam is sufficient to draw air in by inspiration. The pressure of steam required for this purpose is proportioned to the depth of water above the heater in the tank, and cannot be less than those given in Table L:

TABLE L—PRESSURES OF STEAM FOR HEADS OF WATER

Head of water in feet above heater	3	4	5	6	7	8	9	10
Minimum steam pressure, pounds	4	8	12	18	24	32	40	50

If water is to be heated to a greater temperature than 165 degrees Fahr. with less steam pressure than is called for in the foregoing table, air must be supplied under pressure, and both the air pressure and the steam pressure must equal in pounds the height in feet of water above the heater.

Stock sizes of this type of heater, with the manufacturers' ratings in B. T. U. per minute under different steam pressures, can be found in Table LI.

TABLE LI—CAPACITY OF NOISELESS WATER HEATERS

Diameter of Steam Pipe in Inches	Diameter of Air Pipe in Inches	Capacity in Heat Units (B. T. U) Per Minute Steam Pressure				
		10 Pounds	20 Pounds	40 Pounds	60 Pounds	80 Pounds
¼	⅛	810	1,040	1,820	2,485	2,920
½	¼	2,540	3,270	5,720	7,620	9,150
¾	¼	4,375	5,625	9,845	13,125	15,750
1	⅜	7,000	9,000	15,750	21,000	25,200
1½	½	17,500	22,500	39,300	52,500	73,000
2	¾	26,700	34,300	60,100	80,000	96,000
2½	¾	39,000	50,500	88,500	108,000	141,500
3	1	61,200	78,750	137,500	183,700	215,500
4	1¼	103,250	132,750	231,200	309,750	371,700
6	2	245,000	315,000	550,000	735,000	862,000

To find the size of heater required to heat a certain quantity of water in a given time, first find the number of

B. T. U. required per minute and the pressure of steam and the size will be found in the table.

EXAMPLE—100 cubic feet of water shall be heated from 60 to 180 degrees, or 120 degrees increase, in 30 minutes, with steam of 80 lbs. pressure.

Weight of 1 cubic foot of water, 62.5 pounds.

$$\frac{62.5\times100\times120}{30}=\frac{750,000}{30}=25,000 \text{ heat units per minute.}$$

Comparing this with table indicates the 1-inch steam pipe is the size required.

ANOTHER EXAMPLE—200 gallons of water shall be heated from 30 degrees to 90, or 60 degrees increase, in six minutes by steam of 10 pounds pressure. Weight of 1 gallon, 8.3 pounds.

$$\frac{8.3\times200\times60}{6}=\frac{99,600}{6}=16,600 \text{ heat units per minute.}$$

Comparing this with the table indicates that 1½-inch steam pipe is the size required.

Commingler—An apparatus for noiselessly heating water by direct contact in a closed circuit is shown in Fig. 126. This apparatus is known as a *commingler*, and takes the place of, and is connected to, a storage tank in the same manner as a waterback or heater. Water from the hot water tank enters the commingler through the pipe *a* passes up through the body of the casting and flows back through the pipe *b* into the tank. Steam is supplied to the heater through the pipe *c*, passes down pipe *d* and escapes into the body of the commingler through the small holes shown in the nozzle, *e*.

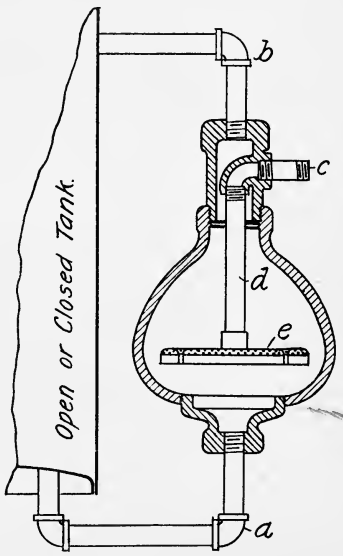

Fig. 126

The admission of steam to the body of the water in this

manner prevents the noise that is experienced when steam enters a body of cold water directly and without being previously broken up, as is done by these holes. Sometimes a portion of the interior of the casting is filled with small pebbles surrounding the nozzle, the effect being to still further break up the steam, which has to force its way through these pebbles before striking the main body of water in the casting.

To use this apparatus in a closed circuit the steam pressure must be greater than the water pressure, and a check-valve should be placed in the steam pipe to prevent water flowing from the commingler to the steam boiler when the steam pressure is low.

Heat Transmitted by Steam to Water—When steam is brought in contact with water of lower temperature than the steam, it almost instantly parts with all of its latent heat and all of its sensible heat above the temperature of the water. Thus, when a pound of steam is brought in contact with water it imparts as many B. T. U. to the water as there are B. T. U. in a pound of steam at that pressure above the temperature of the water. For instance, there are 1141.1 B. T. U. in one pound of steam at atmospheric pressure reckoning from the freezing point, and if allowed to expand in water with a temperature of 60 degrees Fahr., the steam will part with all of its heat until the temperature of the water of condensation is equal to the temperature of the water to be heated. In doing so it will impart $1141.1+32-60=1113.1$ B. T. U. to the water, and will increase its bulk by one pound, or about $\frac{1}{8}$ gallon. The number of B. T. U. in a pound of steam varies with its temperature and pressure.

The number of B. T. U. contained in one pound of water at different temperatures, also the number of B. T. U. required to raise one pound of water from different temperatures to boiling point at atmospheric pressure, may be found in the following table:

TABLE LII—B. T. U. IN WATER AT DIFFERENT TEMPERATURES

Temperature, Degrees Fahr.	Number of B.T.U. reckoning from 0°	Number of B.T.U. Required to raise the Temperature of the Water to Boiling Point 212° Fahr.
35	35.000	177.900
40	40.001	172.899
45	45.002	167.898
50	50.003	162.897
55	55.006	157.894
60	60.009	152.891
65	65.014	147.886
70	70.020	142.880
75	75.027	137.873
80	80.036	132.864
85	85.045	127.855
90	90.055	122.845
95	95.067	117.833
100	100.080	112.820
105	105.095	107.815
110	110.110	102.790
115	115.129	97.771
120	120.149	92.751
125	125.169	87.731
130	130.192	82.708
135	135.217	77.683
140	140.245	72.655
145	145.275	67.625
150	150.305	62.585
155	155.339	57.561
160	160.374	52.526
165	165.413	47.487
170	170.453	42.447
175	175.497	37.403
180	180.542	32.358
185	185.591	27.309
190	190.643	22.257
195	195.697	17.203
200	200.753	12.147
205	205.813	7.087
210	210.874	2.016

Steam Required to Heat Water—The weight of steam required to heat a given quantity of water from a certain temperature to boiling point can be found by the following rule:

RULE—Multiply the number of pounds of water to be heated by the number of degrees temperature the water is to be raised, and divide the product by the total heat of steam at the pressure it is to be used, less the sensible heat at atmospheric pressure. This may be expressed by the formula:

$$s=\frac{w\,h}{L-l}$$

In which s=weight of steam in pounds
w=pounds of water to be heated
h=degrees Fahr. water is to be heated
L=total heat of steam at pressure used
l=sensible heat at atmospheric pressure

EXAMPLE—How many pounds of steam at 70 pounds pressure will be required to heat 7,500 pounds of water from 48 degrees Fahr. to boiling point?

SOLUTION—$\frac{7500\ (212-48)}{(1174-180)}=1237$ pounds of steam. Answer.

An empirical rule that is sufficiently approximate for most purposes is to allow 1 pound of steam for 6 pounds of water to be heated. Taking the above example then

$7500\div 6=1250$ pounds of steam. Answer.

The temperature of steam at different pressures can be found in Table LIII. To use this table, add 14.7 to the reading of the gauge to get absolute pressure; the quantities desired will be opposite this figure.

Usually 15 pounds added to the gauge pressure to get the absolute pressure will be sufficiently accurate for all ordinary purposes.

TABLE LIII—PROPERTIES OF SATURATED STEAM

Absolute Pressure	Temperature Degrees Fahr.	Heat Units above 32 Degrees Fahr. Contained in 1 Pound of Steam			Weight of 1 Cubic Foot in Pounds	Volume of 1 Pound in Cubic Feet
		In Water	Latent Heat	Total Heat		
14.7	212.0	180.9	965.7	1146.6	.0379	26.37
15	213.1	181.6	965.3	.9	.0387	25.85
16	216.3	184.9	963.0	1147.9	.0411	24.33
17	219.5	188.1	960.8	1148.9	.0435	22.98
18	222.4	191.1	958.7	1149.8	.0459	21.78
19	225.3	193.9	956.7	1150.6	.0483	20.70

TABLE LIII—Continued

Absolute Pressure	Temperature Degrees Fahr.	Heat Units above 32 Degrees Fahr. Contained in 1 Pound of Steam			Weight of 1 Cubic Foot in Pounds	Volume of 1 Pound in Cubic Feet
		In Water	Latent Heat	Total Heat		
20	228.0	196.7	954.8	1151.5	.0507	19.73
21	230.6	199.3	953.0	1152.3	.0531	18.84
22	233.1	201.8	951.2	1153.0	.0554	18.04
23	235.5	204.3	949.5	.8	.0578	17.30
24	237.8	206.6	947.9	1154.5	.0602	16.62
25	240.1	208.9	946.3	1155.2	.0625	16.00
26	242.2	211.1	944.7	.8	.0649	15.42
27	244.3	213.2	943.3	1156.5	.0672	14.88
28	246.4	215.3	941.8	1157.1	.0695	14.38
29	248.4	217.3	940.4	.7	.0719	13.91
30	250.3	219.3	939.0	1158.3	.0742	13.48
31	252.2	221.2	937.7	.9	.0765	13.07
32	254.0	223.0	936.4	1159.4	.0788	12.68
33	255.8	224.8	935.1	.9	.0812	12.32
34	257.5	226.6	933.9	1160.5	.0835	11.98
35	259.2	228.3	932.7	1161.0	.0858	11.66
36	260.9	230.0	931.5	.5	.0881	11.36
37	262.5	231.6	930.4	1162.0	.0904	11.07
38	264.1	233.3	929.2	.5	.0927	10.79
39	265.6	234.8	928.1	.9	.0949	10.53
40	267.2	236.4	927.0	1163.4	.0972	10.28
41	268.7	237.9	926.0	.9	.0995	10.05
42	270.1	239.4	924.9	1164.3	.1018	9.83
43	271.6	240.8	923.9	.7	.1041	9.61
44	273.0	242.3	922.9	1165.2	.1063	9.40
45	274.3	243.7	921.9	.6	.1086	9.21
46	275.7	245.1	920.9	1166.0	.1109	9.02
47	277.0	246.4	920.0	.4	.1131	8.84
48	278.3	247.7	919.1	.8	.1154	8.67
49	279.6	249.1	918.1	1167.2	.1177	8.50
50	280.9	250.3	917.3	.6	.1199	8.34
51	282.2	251.6	916.4	1168.0	.1222	8.19
52	283.4	252.9	915.5	.4	.1244	8.04
53	284.6	254.1	914.6	.7	.1267	7.89
54	285.8	255.3	913.8	1169.1	.1289	7.76
55	287.0	256.5	912.9	.4	.1312	7.62
56	288.1	257.7	912.1	1169.8	.1334	7.50
57	289.3	258.9	911.3	1170.2	.1357	7.37
58	290.4	260.0	910.5	.5	.1379	7.25
59	291.5	261.1	909.7	.8	.1401	7.14
60	292.6	262.3	908.9	1171.2	.1424	7.02
61	293.7	263.3	908.2	.5	.1446	6.92
62	294.7	264.4	907.4	.8	.1468	6.81
63	295.8	265.5	906.6	1172.1	.1491	6.71
64	296.8	266.6	905.9	.5	.1513	6.61
65	297.8	267.6	905.2	.8	.1535	6.52

TABLE LIII—Continued

Absolute Pressure	Temperature Degrees Fahr.	Heat Units above 32 Degrees Fahr. Contained in 1 Pound of Steam			Weight of 1 Cubic Foot in Pounds	Volume of 1 Pound in Cubic Feet
		In Water	Latent Heat	Total Heat		
66	298.8	268.7	904.4	1173.1	.1557	6.42
67	299.8	269.7	903.7	.4	.1579	6.33
68	300.8	270.7	903.0	.7	.1602	6.24
69	301.8	271.7	902.3	1174.0	.1624	6.16
70	302.8	272.7	901.6	.3	.1646	6.08
71	303.7	273.6	901.0	.6	.1668	6.00
72	304.7	274.6	900.3	.9	.1690	5.92
73	305.6	275.6	899.6	1175.2	.1712	5.84
74	306.5	276.5	898.9	.4	.1734	5.77
75	307.4	277.4	898.3	.7	.1756	5.69
76	308.3	278.4	897.6	1176.0	.1778	5.62
77	309.2	279.3	897.0	.3	.1800	5.56
78	310.1	280.2	896.3	.5	.1822	5.49
79	311.0	281.1	895.7	.8	.1844	5.42
80	311.9	282.0	895.1	1177.1	.1866	5.36
81	312.7	282.8	894.5	.3	.1888	5.30
82	313.6	283.7	893.9	.6	.1910	5.24
83	314.4	284.5	893.3	.8	.1932	5.18
84	315.3	285.4	892.7	1178.1	.1954	5.12
85	316.1	286.2	892.1	.3	.1976	5.06
86	316.9	287.1	891.5	.6	.1998	5.01
87	317.7	287.9	890.9	.8	.2020	4.95
88	318.5	288.8	890.3	1179.1	.2042	4.90
89	319.3	289.6	889.7	.3	.2063	4.85
90	320.1	290.4	889.2	.6	.2085	4.80
91	320.9	291.2	888.6	.8	.2107	4.75
92	321.7	291.9	888.1	1180.0	.2129	4.70
93	322.4	292.8	887.5	.3	.2151	4.65
94	323.2	293.5	887.0	.5	.2173	4.60
95	323.9	294.3	886.4	.7	.2194	4.56
96	324.7	295.1	885.9	1181.0	.2216	4.51
97	325.4	295.8	885.4	.2	.2238	4.47
98	326.2	296.6	884.8	.4	.2260	4.43
99	326.9	297.3	884.3	.6	.2281	4.38
100	327.6	298.1	883.8	.9	.2303	4.34
101	328.3	298.8	883.3	1182.1	.2325	4.30
102	329.1	296.6	882.7	.3	.2346	4.26
103	329.8	300.3	882.2	.5	.2368	4.22
104	330.5	301.0	881.7	.7	.2390	4.19
105	331.2	301.7	881.2	.9	.2411	4.15
106	331.9	302.4	880.7	1183.1	.2433	4.11
107	332.6	303.2	880.2	.4	.2455	4.07
108	333.2	303.9	879.7	1183.6	.2476	4.04
109	333.9	304.6	879.2	.8	.2498	4.00
110	334.6	305.3	878.7	1184.0	.2519	3.97
111	335.3	305.9	878.3	.2	.2541	3.94

TABLE LIII—Continued

Absolute Pressure	Temperature Degeees Fahr.	Heat Units above 32 Degrees Fahr. Contained in 1 Pound of Steam			Weight of 1 Cubic Foot in Pounds	Volume of 1 Pound in Cubic Feet
		In Water	Latent Heat	Total Heat		
112	335.9	306.6	877.8	1184.4	.2563	3.90
113	336.6	307.3	877.3	.6	.2584	3.87
114	337.2	308.0	876.8	.8	.2606	3.84
115	337.9	308.6	876.4	1185.0	.2627	3.81
116	338.5	309.3	875.9	.2	.2649	3.78
117	339.2	310.0	875.4	.4	.2670	3.75
118	339.8	310.6	875.0	.6	.2692	3.72
119	340.4	311.3	874.5	.8	.2713	3.69
120	341.1	311.9	874.1	1186.0	.2735	3.66
121	341.7	312.5	873.6	.1	.2757	3.63
122	342.3	313.1	873.2	.3	.2778	3.60
123	342.9	313.8	872.7	.5	.2799	3.57
124	343.5	314.4	872.3	.7	.2821	3.55
125	344.1	315.1	871.8	.9	.2842	3.52
126	344.7	315.7	871.4	1187.1	.2864	3.49
127	345.3	316.3	871.0	.3	.2885	3.47
128	345.9	316.9	870.5	.4	.2907	3.44
129	346.5	317.5	870.1	.6	.2928	3.42
130	347.1	318.1	869.7	.8	.2950	3.39
131	347.7	318.7	869.3	1188.0	.2971	3.37
132	348.3	319.3	868.9	.2	.2992	3.34
133	348.9	319.9	868.4	.3	.3014	3.32
134	349.4	320.5	868.0	.5	.3035	3.30
135	350.0	321.1	867.6	.7	.3057	3.27
136	350.6	321.7	867.2	.9	.3078	3.25
137	351.1	322.3	866.8	1189.1	.3099	3.23
138	351.7	322.8	866.4	.2	.3121	3.20
139	352.3	323.4	866.0	.4	.3142	3.18
140	352.8	324.0	865.6	.6	.3163	3.16
141	353.4	324.6	865.1	.7	.3185	3.14
142	353.9	325.1	864.8	.9	.3206	3.12
143	354.5	325.7	864.4	1190.1	.3227	3.10
144	355.0	326.2	864.0	.2	.3249	3.08
145	355.6	326.8	863.6	.4	.3270	3.06
146	356.1	327.4	863.2	.6	.3291	3.04
147	356.6	327.9	862.8	.7	.3313	3.02
148	357.2	328.5	862.4	.9	.3334	3.00
149	357.7	329.0	862.0	1191.0	.3355	2.98
150	358.2	329.6	861.6	.2	.3376	2.96
160	363.3	334.9	857.9	1192.8	.3589	2.79
170	368.2	339.9	854.4	1194.3	.3801	2.63
180	372.9	344.7	851.0	1195.7	.4012	2.49
190	377.4	349.3	847.7	1197.0	.4223	2.37
200	381.6	353.7	844.6	1198.3	.4433	2.26

TABLE LIII—Continued

PROPERTIES OF SATURATED STEAM OF FROM 32 DEGREES TO 212 DEGREES FAHR. AT PRESSURES UNDER ONE ATMOSPHERE

Temperature Degrees Fahr.	Pressure		Total Heat of One Pound Reckoned from Water at 32 Degrees Fahr. Units	Weight of 100 Cubic Feet Pounds	Volume of One Pound of Vapor Cubic Feet
	Inches of Mercury	Pounds per Square Inch			
32	.181	.089	1091.2	.031	3226
35	.204	.100	1092.1	.034	2941
40	.248	.122	1093.6	.041	2439
45	.299	.147	1095.1	.049	2041
50	.362	.178	1096.6	.059	1695
55	.426	.214	1098.2	.070	1429
60	.517	.254	1099.7	.082	1220
65	.619	.304	1101.2	.097	1031
70	.733	.360	1102.8	.114	877.2
75	.869	.427	1104.3	.134	746.3
80	1.024	.503	1105.8	.156	641.0
85	1.205	.592	1107.3	.182	549.5
90	1.410	.693	1108.9	.212	471.7
95	1.647	.809	1110.4	.245	408.2
100	1.917	.942	1111.9	.283	353.4
105	2.229	1.095	1113.4	.325	307.7
110	2.579	1.267	1115.0	.373	268.1
115	2.976	1.462	1116.5	.426	234.7
120	3.430	1.685	1118.0	.488	204.9
125	3.933	1.932	1119.5	.554	180.5
130	4.509	2.215	1121.1	.630	158.7
135	5.174	2.542	1122.6	.714	140.1
140	5.860	2.879	1124.1	.806	124.1
145	6.662	3.273	1125.6	.909	110.0
150	7.548	3.708	1127.2	1.022	97.8
155	8.535	4.193	1128.7	1.145	87.3
160	9.630	4.731	1130.2	1.333	75.0
165	10.843	5.327	1131.7	1.432	69.8
170	12.183	5.985	1133.3	1.602	62.4
175	13.654	6.708	1134.8	1.774	56.4
180	15.291	7.511	1136.3	1.970	50.8
185	17.044	8.375	1137.8	2.181	45.9
190	19.001	9.335	1139.4	2.411	41.5
195	21.139	10.385	1140.9	2.662	37.6
200	23.461	11.526	1142.4	2.933	34.1
205	25.994	12.770	1143.9	3.225	31.0
210	28.753	14.126	1145.5	3.543	28.2
212	29.922	14.700	1146.1	3.683	27.2

Heating Water by Gas

Instantaneous Water Heaters are not extensively used for heating large quantities of water, nor for heating water to a high temperature. They are used chiefly for heating water for bathing or other like purposes, and are placed on a shelf near the fixture to be supplied, so the heated water can discharge into it by gravity.

In the type of heaters shown in Fig. 127, cold water enters the coils through the valve, *a*, and the flow is regulated by the lever, *b*. The coil, *c*, grades from the point where the water enters the coil to the discharge tube, *d*. This causes most of the heat from the burning gas to be absorbed by the water, because the cold water in the top coil is of lower temperature than the hot gases passing over them. If the water enter the coils near the bottom and discharge from the top, the temperature of the water in the top coils would be as hot or hotter than the gases passing over them and therefore could absorb no heat from the gas, hence some heat would be lost. Gas enters through the valve, *e*, to the burners, *f*, which are lighted by the pilot, *g*. Both gas and water are regulated by the lever, *b*, which controls both valves, so that gas cannot be turned on and lighted without the coils being filled with water. The illustration shows the heater burning ordinary illuminating gas. The better practice, however, is to have an air mixer and burn a blue flame, which gives a hotter fire with a less consumption of fuel.

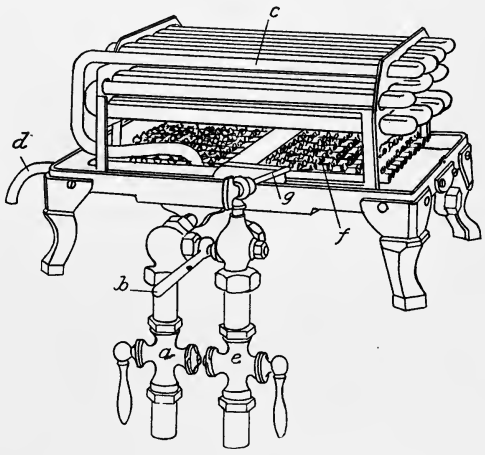

Fig. 127

Another type of instantaneous water heater, Fig. 128, consists of a sheet metal cylinder in which water passes over the surface of metal plates heated by gas. The water is released from the supply pipe near the top of the heater, falls in a thin sheet and spreads over the entire heating surface to near the bottom of the heater, whence it discharges through a tube into the receptacle where the water is to be used. The gas valve, *a*, and water valve, *b*, are so connected that gas cannot be turned on without also turning on the water, thus preventing overheating or burning any of the parts. The amount of water heated per minute is controlled by a water regulator. The gas is ignited by the pilot, *c*. Gas enters the burners, *d*, *d*, from the burner ring, *e*. *f* is a drip ring to catch the condensation that gathers on the inside of the heating tube, *i*.

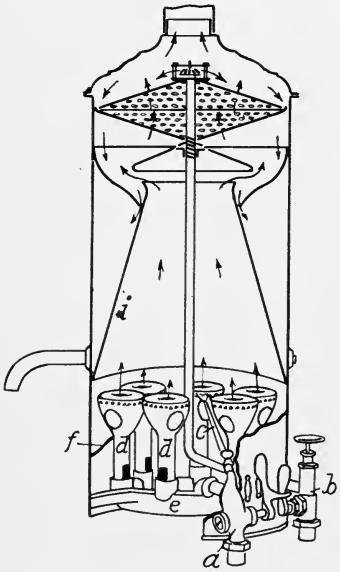

Fig. 128

Either of the above types of water heaters can be changed to a gasoline burner by changing the gas burners for gasoline burners and supplying a storage tank to hold the gasoline.

Instantaneous heaters should be provided with a drip pan or safe to catch the water of condensation, inseparable from instantaneous heaters of all types. A waste pipe to carry off the drip should lead from the waste or drip pan to a trapped and water-supplied sink. It should never discharge into the bath tub, as the water would stain the tub.

When installing a heater, the water supply should be connected to a water heater first so the plates or tubes cannot be burned by lighting the gas to test the burners. A

stop-cock or valve should be placed on each of the supply pipes to regulate the flow of gas and water to the heater, or cut the supply off if necessary for repairs.

A separate gas service of sufficient size to furnish an adequate supply of gas, should be run from the gas meter to the heater. When the gas supply is ample and the pressure strong, a one-half inch pipe will be large enough if the distance between the meter and heater is not too great. With a scant supply or weak pressure, the gas pipe should be at least ¾-inch in diameter. A meter of less capacity than 10 lights should never be used when a water heater using gas for fuel is connected to the supply.

The top of an instantaneous heater should be connected with a vent pipe leading to a flue or the outer atmosphere to carry off the products of combustion. They should never be allowed to discharge into the room where the heater is located. The capacity of instantaneous water heaters range from 1½ to 9 gallons of water per minute, heated from a temperature of 60 to 110 degrees Fahr. They are seldom used to heat water when a greater temperature than 130 degrees is required.

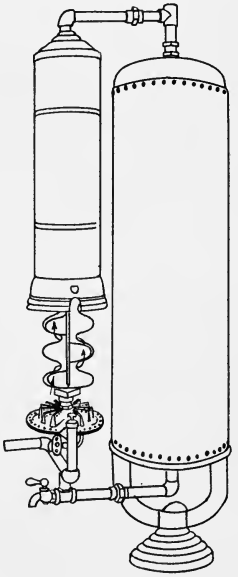

Fig. 129

Gas Water-Heater—This kind of water heater is used to heat water under pressure, and to a higher temperature than 130 degrees. It takes the place of a waterback for heating water to be stored in a tank, or may be used as an auxiliary to a waterback to keep a supply of hot water in a tank at times when there is a greater demand than a waterback can supply. Also, it may be used in connection with a steam coil in a tank to heat the water during warm weather or at other times when steam is not available.

In the illustration, Fig. 129, the gas water-heater is

connected to a tank. The outer casing is raised to show the construction of the heater which consists of a hollow casting through which water circulates, absorbing heat from the gases of combustion that come in contact with the outside of the casting. Heat is applied at the bottom through a burner that is provided with a mixing chamber to admit air to the gas and thus produce a blue flame.

Automatic Water Heaters—This kind of heater, Fig. 130, may be set up in the cellar or any other convenient place in a building. The hot water supply should then be connected to it in such a manner that all water to be heated will have to pass through the coils in the heater. A separate gas service, not less than one inch in diameter, should then be run direct from the gas meter to the heater. The operation of apparatus is as follows: When the gas and water supplies are connected to the heater, and turned on, the pilot light should be lighted and maintained so. The heater is then ready for use. By opening any hot water faucet in the house, the water is started circulating through the heater and at the same moment the pressure is released from the gas valve, thus turning on the gas which is ignited by the pilot light, and the water passing through the coils is heated.

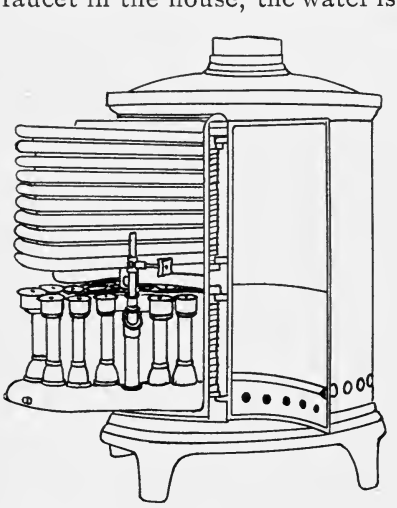

Fig. 130

The flow of water and gas are graduated and proportioned to each other by means of an automotic water and gas valve, so that whatever quantity of water is passing through the coils of the heater, only a sufficient amount of gas is admitted to heat that volume of water. By thus proportioning the flow of water and gas to each

other, a uniform temperature to the water is secured regardless of the amount of water being drawn.

No storage tank is used in connection with this kind of heater, and, except in the pilot light, fuel is burned only when water is being drawn from the hot water faucets. The water is heated as required by passing through a long copper tube coiled inside of an iron jacket and arranged over the gas burner so as to absorb most of the heat produced by the burning gas.

The capacity of this type of heater varies with the size, from 3 to 7 gallons of water each minute, the temperature of which is raised from 55 to 130 degrees Fahr. with a consumption of one cubic foot of gas for each gallon of water heated. One cubic foot of illuminating gas contains about 700 B. T. U. and when burned in a well designed heater should be capable of heating one gallon of water from ordinary temperature to 130 degrees Fahr.

TANKS FOR STORING HOT WATER

Range Boilers are storage tanks for hot water. They are usually located near the kitchen range, and the water in them is heated by the waterback in the range. Some boilers are made of copper, some of wrought-iron and some of steel. Wrought iron and steel boilers are made plain, painted and galvanized. Range boilers of larger capacity than 200 gallons are not made in stock sizes.

Copper Boilers are made for both low pressure and for heavy pressure water supplies. A low pressure boiler is made of light cold-drawn copper, polished on the outside and generally tinned on the inside. They are tested to about 75 pounds pressure, and are suitable only for systems where the pressure does not exceed 20 pounds per square inch. The chief objection to boilers of this type is their liability to collapse from atmospheric pressure when the water is in any way siphoned from them.

Safety Copper Boilers are made with internal brass ribs to reinforce them. In some types of safety boilers, the internal rib runs spirally around the boiler from one

end to the other. Reinforcing boilers makes them proof against collapsing from external pressure.

Safety copper boilers are tested before shipping. There are two grades of safety boilers: one tested to 150 pounds pressure and guaranteed to stand a working pressure of 100 pounds; the other tested to 250 pounds pressure and guaranteed to stand a working pressure of 150 pounds. Both grades are guaranteed against collapsing, provided no check valve is used on the cold water supply to the boiler. If a check valve is used it confines to the boiler the water that would otherwise expand back into the water mains, when the water in the boiler is heated, and expansion might subject the boiler to a pressure far in excess of what it is guaranteed to stand. Copper boilers are the best appearing range boilers made. They are easily stained green, however, and they radiate heat to surrounding objects at a greater rate than do iron boilers.

The capacities and dimensions of stock sizes of copper safety boilers can be found in Table LIV:

TABLE LIV—CAPACITIES OF COPPER BOILERS

Capacity Gallons	Height Inches	Diam. Inches	Capacity Gallons	Height Inches	Diam. Inches
30	60	12	100	60	22
35	60	13	120	65½	24
40	60	14	125	69	24
50	60	16	150	78½	24
60	60	18	200	87	26
80	60	20			

Galvanized Range Boilers are made for both standard and extra heavy pressures. The standard boilers are generally marked tested to 200 pounds pressure and rated to stand a working pressure of 150 pounds.

The extra heavy boilers are marked tested to a pressure of 250 pounds and rated to stand a working pressure of 200 pounds. Galvanized range boilers are made both single and double rivetted. Single rivet boilers have but one row of rivets along the seam, while double rivet boilers have a

double row of rivets along the seam. Most extra heavy boilers have double rivet seams.

Galvanized range boilers are galvanized after being made, and are galvanized both inside and out. The coating of zinc deposited on both inner and outer surfaces by the process of galvanizing helps to make the joints and rivets water-tight. Galvanized range boilers are not guaranteed, and notwithstanding the stenciled statement printed on each boiler that it has been tested to a certain pressure, they are seldom tested before leaving the factory, and are

TABLE LV—CAPACITIES OF GALVANIZED BOILERS

Standard			Extra Heavy		
Trade Capacity Gallons	Dimensions over all Inches	Average Weight Pounds	Trade Capacity Gallons	Dimensions over all Inches	Average Weight Pounds
18	12 x 36	50	24	12 x 48	72
21	12 x 42	58			
24	12 x 48	60	24	14 x 36	67
24	14 x 36	61			
27	12 x 54	68	27	12 x 54	84
28	14 x 42	71			
30	12 x 60	73	30	12 x 60	87
32	14 x 48	75			
35	13 x 60	82	35	13 x 60	98
36	12 x 72	89			
36	14 x 54	84	40	14 x 60	105
40	14 x 60	89			
42	16 x 48	98	42	16 x 48	115
47	16 x 54	110			
48	14 x 72	106	52	16 x 60	139
52	16 x 60	117			
53	18 x 48	124	63	16 x 72	166
63	16 x 72	140			
66	18 x 60	147	66	18 x 60	165
79	18 x 72	171			
82	20 x 60	174	82	20 x 60	202
98	20 x 72	199			
100	22 x 60	202	100	22 x 60	229
120	24 x 60	260			
144	24 x 72	294			
168	24 x 84	325			
192	24 x 96	375			

not suitable for pressures of more than one half that which they are marked tested.

The capacities, dimensions and weights of galvanized

iron boilers, both standard and extra heavy, can be found in Table LV.

Cold-Weld Range Boilers are made without rivets. They are made plain, painted or galvanized and in standard, extra heavy and double extra heavy grades. The standard grade is tested to a pressure of 200 pounds and rated to stand a working pressure of 150 pounds. This grade is not guaranteed. The extra heavy grade is tested to 250 pounds pressure and is guaranteed for three years to stand a working pressure of 200 pounds. The double extra heavy grade is tested to 300 pounds pressure and is guaranteed for six years to stand a working pressure of 250 pounds and not to collapse from external pressure.

The capacities, dimensions and weights of the three grades of cold weld boilers can be found in Table LVI.

TABLE LVI—CAPACITIES OF COLD WELD BOILERS

Standard			Extra Heavy			Double Extra Heavy			
Trade Capacity Gals.	Dimensions over all Inches	Average W'ght Lbs.	Trade Capacity Gals.	Dimensions over all Inches	Average W'ght Lbs.	Trade Capacity Gals.	Dimensions over all Inches	Weight, Lbs.	
								Net	Shipping
18	12 x 36	53	24	12 x 48	81	24	12 x 48	97	109
21	12 x 42	62	24	14 x 36	83	30	12 x 60	114	127
24	12 x 48	65	27	12 x 54	90	35	13 x 60	122	135
24	14 x 36	66	30	12 x 60	94	40	14 x 60	130	144
27	12 x 54	72	35	13 x 60	102	52	16 x 60	152	167
28	14 x 42	75	40	14 x 60	110				
30	12 x 60	79	42	16 x 48	120				
32	14 x 48	82	52	16 x 60	138				
35	13 x 60	86	66	18 x 60	172				
36	14 x 54	89							
40	14 x 60	92							
42	16 x 48	102							
47	16 x 54	114							
52	16 x 60	121							
53	18 x 48	130							
66	18 x 60	154							

Mud Drum for Boilers—In localities where the water supply carries large quantities of clay or loam in suspension, a boiler with a mud drum or sediment chamber, Fig.

131, should be used. The boiler will then serve as a settling basin and most of the suspended matter will settle to the bottom of the boiler and into the sediment space. It can then be washed out at suitable intervals by opening the blow-off cock at the bottom of the boiler. If the particles held in suspension in the water are comparatively coarse, about fifty per cent. will be removed by sedimentation.

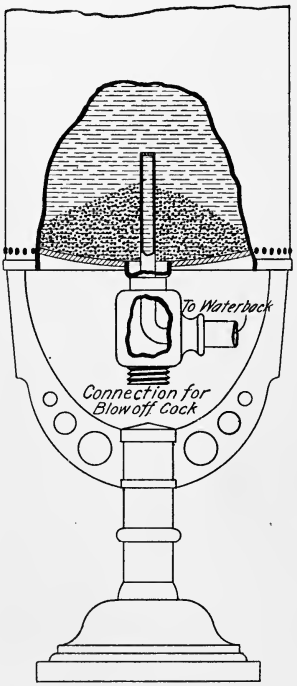

Fig. 131

Hot Water Tanks are large wrought-iron or steel storage tanks of 200 gallons or more capacity, used in connection with water heaters. They are generally used plain or painted, but are seldom galvanized, owing to the great cost of galvanizing large tanks. Large hot water tanks are seldom carried in stock, but are made to order. A sketch, showing the location and size of all outlets should accompany all orders for hot water tanks. The size of the tank and pressure of the water should always be considered when ordering, and when storage tanks are extremely large and subject to great internal pressure, stay bolts and cross braces should be used to give the tank additional strength. Boilers and tanks, of whatever type or make, should be tested and guaranteed to stand a pressure of at least double the static pressure of the water to be stored. This is to provide a factor of safety for occasions when the internal pressure is increased by the expansion of the water when heated, or the increased pressure, perhaps double the static pressure, due to water hammer.

Supports for Boilers and Tanks—Range boilers are usually placed alongside the kitchen range in a vertical

position where they rest upon a cast iron boiler stand. When range boilers are placed horizontally they usually rest on iron brackets attached to the top or back of the range. Horizontal storage tanks are generally supported by iron bands attached to the iron floor beams above. When they are set vertically they are supported by iron frames or legs. The best way to set a hot water tank, however, is to let it rest firmly on the cement floor of cellar or basement where it is located. If there is no cement floor, a flag stone or cement base can be provided for both the heater and tank to rest upon.

Proportioning Size of Tank and Boilers—Range boilers and heater tanks are used to store water heated by waterback or water heater during periods when hot water is not being drawn. It thus provides a supply to draw upon when hot water is used faster than it can be heated by the waterback or heater. Also, it allows a smaller heater to be used than would be the case if water were drawn direct from a heater and had to be heated as fast as used.

The size of a tank for storing hot water should bear a certain relation both to the capacity of the heater and to the number of gallons of hot water used daily. If the tank is too large for the heater there will never be a supply of hot water in the tank, and if the tank is too small the water will become heated to above 212 degrees, and when released from the faucet will flash instantly into steam; also in many cases it will cause a rattling, snapping sound in the heater.

An ordinary range has a waterback with a heating surface of about 110 square inches exposed to the fire. A waterback of such a size will ordinarily heat sufficient water for an average size family. It can be used in connection with any size of boiler, from 35 to 50 gallons capacity. The size of the boiler should depend upon the probable amount of hot water that will be used daily. If the water is used uniformly throughout the day, and almost as fast as it is heated, a 35-gallon boiler will be sufficiently large. If, on the other hand the water is drawn in-

termittently, with long intervals between drafts, a larger boiler should be used to store the water heated during the intervals.

In public and semi-public buildings, where large quantities of hot water are used, the heater must be large enough to heat water as fast as it will probably be used during periods of average consumption, and the hot water tank should be large enough to store sufficient water for one hour's maximum supply. For instance, in an apartment house where the probable maximum consumption of hot water would equal 250 gallons per hour, and the average consumption 125 gallons per hour, the heater should be capable of heating at least 125 gallons per hour, and the tank should have a storage capacity of 250 gallons.

The size of hot water tank required for a large building depends so much upon conditions peculiar to that building that a satisfactory rule applicable to all cases cannot be formulated. An approximation that will be found sufficient for most apartment houses is to allow 5 gallons capacity in the tank for each inmate the building will accommodate. For large hotels and public institutions that have accommodations for 300 and more people, a smaller allowance, about 4 gallons per capita, will be found sufficient.

Boiler and Tank Connections—Connections between tank and heater should be made with copper, brass or iron pipe. Lead pipe is unsuitable for hot water connections, as it expands when heated and upon cooling does not contract to its original length but sags when run horizontally, thus forming traps in the pipe. Furthermore, the joints on lead pipe are liable to be melted and pull apart when the temperature of the pipe becomes very high, or should the water be siphoned out of the boiler below the waterback, the heat from the fire would melt off the soldered joints.

Circulation between water heater and tank is impeded by friction, therefore the ends of brass, copper and iron pipe should be carefully reamed to remove the burr formed

by cutting, and 45 degree bends or large radius 90 degree bends of recess pattern should be used to connect the heater and tank. Pipe of smaller diameter than ¾ inch should never be used to connect a waterback or heater to a storage tank, and the larger the pipe used within reasonable limits the better the circulation of water.

The usual method of connecting a heater to a hot water tank is shown in Fig. 132. The circulation pipe, *a*, from the bottom of the tank is connected to the bottom opening of the waterback, and the flow pipe, *b*, grades from the top opening of the waterback up to the side connected to the boiler, about one-third distance from the bottom. The coldest water in a tank is always at the bottom and the hottest water at the top ready to be drawn through the hot water pipe. The temperature of the water grades uniformly from the hottest water at the top to the coldest water at the bottom of the tank.

A better way to connect the flow pipe from a waterback to a range boiler is shown by the dotted lines, *c*. In place of entering the side of the boiler, as in the ordinary method, the flow pipe is connected to a branch in the hot water supply above the boiler. The efficiency of a heater depends upon the velocity of the circulating water, and the velocity depends upon the vertical height of the column of

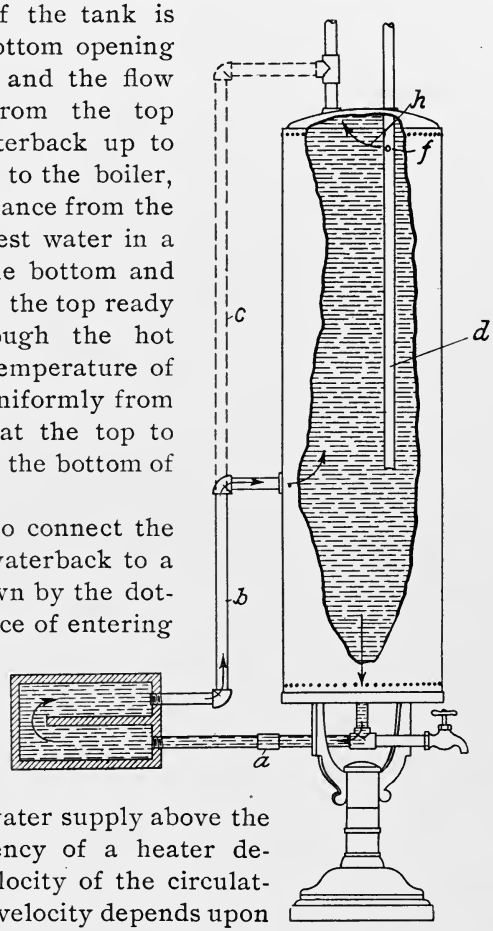

Fig. 132

water, therefore with the flow pipe connected to the top of the boiler there would be a greater head, consequently a greater velocity than if the flow pipe entered the side of the boiler.

Many authorities object to the top connection on account of the possible loss of circulation in case the water is siphoned from the boiler to the level of the hole, *f*, in the cold water tube, or to the bottom of the cold water tube, *d*. The reason is not a good one, however, for as long as the waterback remains full of water no damage can result.

If steam is generated it will either condense on the walls of the boiler or escape through the cold water pipe to the street mains. It is only when water is siphoned out of a boiler low enough to empty the waterback that it is damaged. Then, if the fire is continued in the range the waterback becomes overheated, and is liable to crack if cold water is quickly turned into it.

The cold water supply to a boiler usually enters the top and is conducted down through the hot water by a tube, *d*. If the tube were omitted cold water might short circuit from the cold water to the hot water pipe, as shown by the arrow, *h*, and cold water would then be drawn from the hot water faucet. If the cold water supply did not short circuit to the hot water pipe, it would mingle with the hot water at the top of the boiler, thus tending to cool it. The tube, *d*, should be tapped at *f* with a hole sufficiently large to admit air to break the siphon in case a vacuum is formed in the cold water supply pipe. The size of the hole should vary with the size of the tube, and should have a sectional area of at least one quarter the sectional area of the tube.

The cold water tube in a boiler should never extend below the level of where the flow pipe enters the side of the boiler. If water is siphoned from the boiler it cannot be emptied below the end of the cold water tube, and if the end of the tube is above the flow pipe from the waterback, it provides for circulation through the waterback when the flow pipe is connected to the side tapping in the boiler, and in any event it will ensure the waterback remaining full

of water when the siphonage takes place. Boiler tubes for the cold water should be of brass or copper to prevent their rusting off or the vent tube choking with rust.

Many plumbers now connect the flow pipe from the waterback to both the side and to the top of a boiler, as shown by the solid lines, *b*, and dotted lines, *c*, in the illustration.

Safety Appliances—The most serious result of water being siphoned from a boiler is the liability of the boiler collapsing from atmospheric pressure. To prevent this, a vacuum valve can be placed close to the boiler in a branch to the cold water pipe. The vacuum valve will admit air to the boiler in case a vacuum is formed, and thus prevent the boiler being emptied and then collapsed by external pressure. A vacuum valve should be used whenever a boiler is located at such a height in a building that there is danger of the water being siphoned out when a cold water faucet is opened at a fixture below, after the water is shut off from the building.

Another way of preventing the water being siphoned from a boiler is to place a check valve in the cold water pipe. This method, however, prevents the water expanding back into the street mains when the water is heated, and might cause the boiler to burst from internal pressure unless some relief is provided. Relief is generally provided under such conditions by means of a safety valve or expansion pipe.

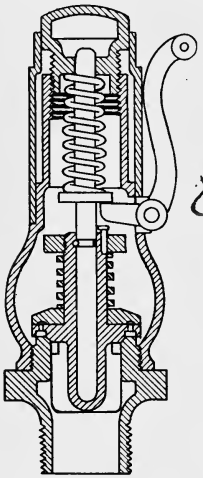

Fig. 133

A Safety Valve, Fig. 133, consists of a valve that is held closed by means of a spring adjusted so that when the internal pressure reaches a certain intensity it will open the valve and hold it open until the pressure is reduced, so the spring can close the valve again. A safety valve should always be used in connection with a check valve when the water is supplied from a street main. The outlet to the safety valve should be connected to a pipe

leading to a sink, so that in case it blows off, the water will not be scattered over the kitchen, and scald anyone.

Combined safety and vacuum valves are sometimes used to provide safety against rupture from internal pressure or collapsing from atmospheric pressure.

An Expansion Pipe is used only with tank pressure. It consists of an extension of the hot water pipe up to and over the cold water supply tank, where it should return so as to discharge steam or water into the cold water tank.

A blow-off cock should be provided with every boiler to draw off water from it when necessary to empty the boiler. In practice it is quite usual to connect the blow-off pipe direct to the drainage system, either to the kitchen sink trap or to the waste pipe below the sink trap. This is bad practice. When a building is closed for any great period of time, the boiler is usually drained of water and the blow-off cock left open to carry off any drip from the pipes or boiler. That provides a direct communication between the house drainage system and the water supply system and possibly the living rooms.

The best place to discharge the water from the blow-off of a boiler is in a trapped and water-supplied sink when there is one at a lower level than the boiler blow-off. When there is not, a compression hose bib connected to a branch of the circulation pipe to the waterback will provide a means of emptying the boiler through a hose or into pails. The blow-off cock should always be located at the lowest part of the water heating apparatus, so it can be completely drained of water. If the waterback is located on one floor and the boiler at a higher level, then the blow-off cock would have to be connected near the waterback.

Double Heater Connections to Boilers—Two or more heaters are sometimes connected to one boiler. For instance, a coal or gas heater is sometimes used to heat the water during summer months, and a steam coil used to heat the water during winter weather. Each connection would be made independently of the other under such circumstances,

and either means or both means could be used together to heat the water.

The real test of the efficiency of a double heater connection to a boiler is the ability to heat with one or both heaters together. When two waterbacks or heaters are connected to the one hot water tank, by joining the flow and return pipe from both circuits, great care must be taken to connect them in such a manner that the current from one circuit will not be stronger than the current to the other circuit, and thus short circuit the strong current and shut off the flow from the weak one. That is what usually happens when one heater is located at a lower level than the other heater, or if located at the same level but at a great distance. Also, it might happen if one circuit was made of smaller pipe than the other one, or for any other cause was subject to greater friction.

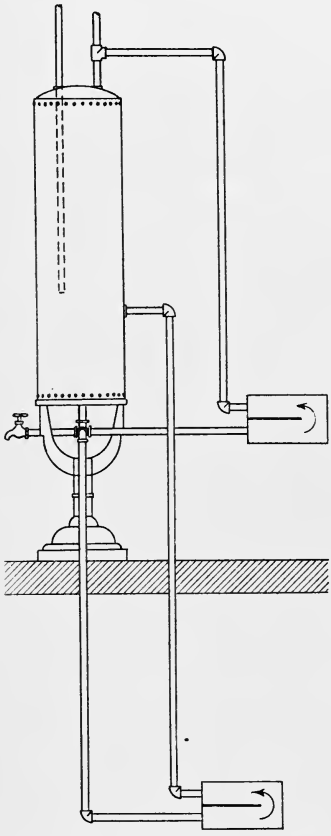

Fig. 134

The best way to connect two or more heaters to one tank is to connect each one separately. If there are only two heaters they may be connected as shown in Fig. 134, or the flow connection can be reversed, so the flow pipe from the heater on the lower floor will enter the top of the boiler. This will not affect the circulation from either heater otherwise than to cause a loss of velocity in the upper circuit, due to loss of head. If more than two heaters are to

be connected, special tappings should be provided in the tank for the extra flow and circulation pipes.

When two heaters are located at different levels they are sometimes connected so the water will pass in circuit through both of the waterbacks. This, however, is a poor method of connecting them. When a fire is burning in only one heater, a great amount of heat is lost by radiation in passing through the cold heater and extra circulation piping, and when there is a fire in both heaters the heat imparted to the water in the tank is less than if each heater was connected separately to the tank.

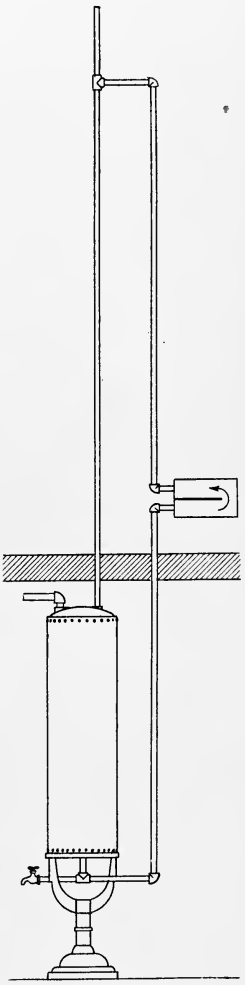

Fig. 135

Heater Connection to Boiler at Lower Level — Circulation can be secured and the water heated in a boiler that is located below the level of the waterback, as shown in Fig. 135. When the boiler is so located, however, the circulation is sluggish at all times, and the weights of the two columns of water so nearly balance each other that good circulation cannot always be depended upon. In connecting the waterback to the boiler under such conditions, the circulation pipe from the boiler to the waterback is taken from the bottom of the boiler, and the flow pipe from the waterback to the boiler is extended vertically from the waterback to a distance equal to the distance from the waterback to the bottom of the boiler. If greater vertical height can be given the flow pipe, the more positive will be the circulation. The circu-

lation pipe returns from the highest point to which it is carried and enters the top of the boiler. The hot water pipe is taken from the top of the circulation loop.

Connections to Horizontal Boilers—Boilers are sometimes placed in a horizontal position when there is no floor space to set them vertically. The usual tapping for a vertical boiler may be used when set horizontally, but the better practice is to have special tappings. When a vertical boiler is placed horizontally and stock tappings used, a boiler tube should be placed in the hot water pipe and curved upward inside of the boiler so as to offer an outlet near the top of the boiler for the hot water. The side tapping of the boiler is turned down and used for the circulation opening to the waterback. The flow pipe from the waterback enters what would be the bottom tapping of the boiler and the cold water enters the cold water tapping without a tube. The only special tapping necessary for a horizontally placed boiler is on the top side, to provide a connection for the hot water pipe.

Overheated Water—As previously stated, the relation between the boiling point of water (which also is the generating point of steam) and pressure is absolute. Under a given pressure water will boil and steam will generate at a certain temperature. Increase the pressure and the point at which the water will boil will also increase. Thus, at atmospheric pressure, water will boil at 212 degrees Fahr., while if the pressure is increased to 50 pounds, a common pressure for water in city mains, the boiling point of the water will be increased to 297 degrees Fahr.

If water under pressure is raised to a temperature above 212 degrees Fahr. and then released to the atmosphere, part of the water will instantly flash into steam and continue to generate steam until the temperature of the water is reduced below the boiling point at atmospheric pressure. Thus when water under pressure in a tank is raised to the boiling point at that pressure and a hot water faucet is opened, steam will flow from the faucet with a sputtering sound caused by the mixture of water with

the steam. This flow of steam will continue until the temperature of the water in the tank has been lowered by the inflowing cold water to below 212 degrees Fahr. The hot water tank is not full of steam, as would appear to the person at the faucet, but the water is instantly converted into steam as soon as the pressure is released from the water at the faucet. The overheating of water in a tank can be prevented by the use of temperature regulators, which are made to control the supply of steam to steam coil, also to regulate the drafts to water heaters, and by these means maintain a uniform temperature of water in a tank.

Draft Regulators—An apparatus used to regulate the drafts of a water heater is shown in Fig. 136. It consists of a chamber, *a*, enclosed in a casting, *b*, with an annular space between them for water to circulate through. The inner chamber is connected by means of a pipe, *c*, to a diaphragm in valve, *d*, which is fitted with a lever and chain, so that any movement of the lever will open or close the dampers. The regulator is attached to the flow pipe from a heater, as shown in the illustration. The operation of the apparatus is as follows: The inner chamber is partly filled with water through the plugged

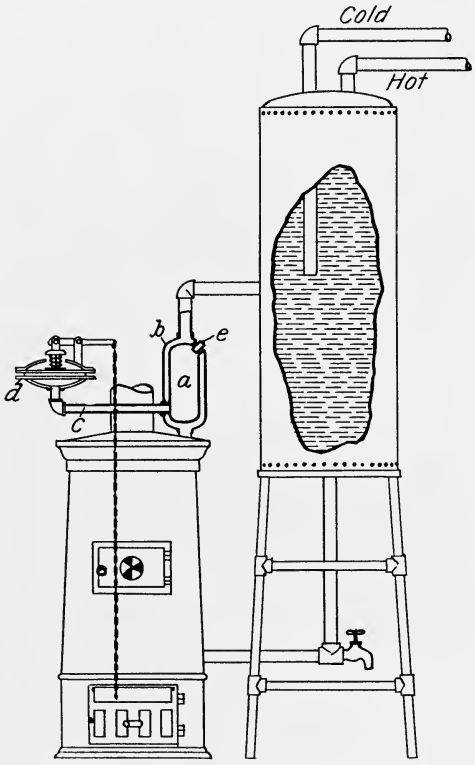

Fig. 136

connection, *e*, and the plug screwed in to prevent the escape of water or steam. The water in the inner chamber is under atmospheric pressure, which boils at 212 degrees Fahr., while the water in the heater is under an additional pressure that prevents it boiling at the same temperature as that in the chamber; hence, when the temperature of the water in the heater rises above 212 degrees Fahr. it will cause the water in the chamber to generate steam, which presses the water against the diaphragm of the valve, *d*, thereby depressing the lever and closing the dampers. The fire is at once checked and no steam can form in the hot water tank, as the boiling point for the corresponding pressure has not been reached. When the temperature of the water in the heater falls below 212 degrees Fahr. the steam in the chamber condenses and pressure is released from the diaphragm, which immediately settles back into place, thus opening the dampers.

Steam Coil Regulators—A regulator used for controlling the supply of steam to heating coils in tanks, is shown in Fig. 137. It is operated by means of the unequal expansion of two different metal bars, *a*, which when heated to a certain temperature by water in the tank, *b*, open a small valve, *c*, in a water supply pipe, thus admitting the water pressure to the diaphragm valve, *d*. The pressure of water on the diaphragm closes the valve and thus cuts off the supply of steam from the coil. As soon as the temperature of water in the tank falls sufficiently, the metal bars contract, thus shutting off the supply of water from the diaphragm valve, which is opened by a spring and again admits steam to the coil.

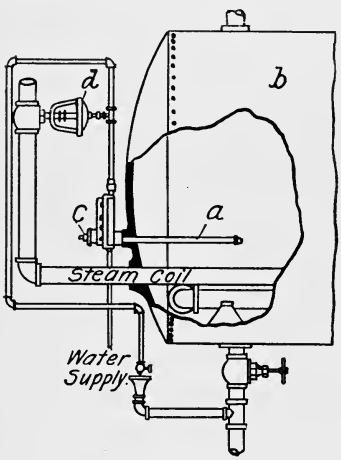

Fig. 137

Circulation Pipes—Hot water pipes that are extended any great distance to a fixture or group of fixtures should be provided with a circulation pipe through which hot water can circulate and thus be close to the faucets at all times. If circulation pipes are not provided, the water in hot water pipes cools when not being constantly drawn, and much time is wasted emptying the pipes of cold water when hot water is wanted. The water annually wasted in this manner, in any building, would more than pay for circulation pipes.

When installing the hot water system, a return pipe of smaller diameter than the hot water pipe is carried from the highest point of the hot water riser back to the boiler where it may be connected to a separate tapping in the boiler or it may be connected to the return pipe from boiler to waterback. In large buildings return circulation pipes are connected into a return header or manifold close to the hot water manifold. A valve should be put in each return pipe in a position to correspond with the shut-off valve in a hot water pipe, and both should be opened or closed as the case may be. Should only the hot water valve be closed, water would back up through the circulation pipe, and should the return valve be closed there would be no circulation through the pipes.

Expansion of Pipes—Water pipes expand or contract for every change of temperature to which they are subjected. To provide for this, in all tall buildings expansion loops are placed in both hot water and circulation pipe to permit the expansion and contraction of the lines without injury to the pipes. The loops are usually from 6 to 8 feet long, made as shown in Fig. 138, placed under floors and spaced about 50 feet apart. Usually hot water and circulation pipes are fastened midway between loops

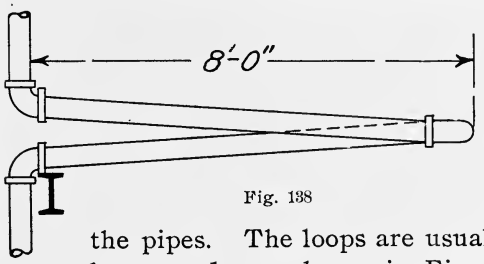

Fig. 138

and allowed to expand both up and down. The length that water pipes will expand depends upon the degree to which they are heated and the material of the pipes. Within ordinary ranges of temperature, cast iron pipe varies $\frac{1}{162000}$ of its length for each degree Fahr., heated or cooled. Wrought iron pipe varies $\frac{1}{1500000}$ of its length for each degree Fahr. heated or cooled, and brass pipe varies $\frac{1}{100000}$ of its length for each degree Fahr., heated or cooled. Hence the expansion or contraction of any pipe, when the length and the temperature of water are known, can be found by the following rule:

RULE—Multiply the length of pipe in inches by the number of degrees Fahr. it is heated or cooled, and divide the product by the coefficient of expansion for the kind of pipe used.

Expressed as a formula:

$$e=\frac{lh}{c}$$

when l=length of pipe in inches

h=degrees Fahr. the pipe is heated or cooled

c=coefficient of expansion ($\frac{1}{162000}$ cast iron, $\frac{1}{1500000}$ wrought iron and $\frac{1}{100000}$ brass)

e=elongation of pipe in inches

EXAMPLE—What will be the expansion of a wrought iron pipe 100 feet long when heated from 60 to 212 degrees temperature?

SOLUTION—100 ft. $\times$12 in. $\times$152=182400$\div$1500000=1.21 inches.

The following table of linear expansion of cast iron, wrought iron and brass pipe for each 100 feet length at different temperatures, will be found convenient for reference.

TABLE LVII—EXPANSION OF CAST IRON PIPE

Temperature of Air when Pipe is Fitted	Length of Pipe when Fitted	Length of Pipe when heated to							
		215 Deg. Fahr.		265 Deg. Fahr.		297 Deg. Fahr.		338 Deg. Fahr.	
Deg. Fahr	Feet	Feet	Inches	Feet	Inches	Feet	Inches	Feet	Inches
0	100	100	1.59	100	1.96	100	2.20	100	2.50
32	100	100	1.36	100	1.65	100	1.96	100	2.27
64	100	100	1.12	100	1.43	100	1.73	100	2.00

TABLE LVIII—EXPANSION OF WROUGHT IRON PIPE

Temperature of Air when Pipe is Fitted	Length of Pipe when Fitted	Length of Pipe when heated to							
		215 Deg. Fahr.		265 Deg. Fahr.		297 Deg. Fahr.		338 Deg. Fahr.	
Deg. Fahr.	Feet	Feet	Inches	Feet	Inches	Feet	Inches	Feet	Inches
0	100	100	1.72	100	2.21	100	2.31	100	2.70
32	100	100	1.47	100	1.78	100	2.12	100	2.45
64	100	100	1.21	100	1.61	100	1.87	100	2.19

TABLE LIX—EXPANSION OF BRASS PIPE

Temperature of Air when Pipe is Fitted	Length of Pipe when Fitted	Length of Pipe when heated to							
		215 Deg. Fahr.		265 Deg. Fahr.		297 Deg. Fahr.		338 Deg. Fahr.	
Deg. Fahr.	Feet	Feet	Inches	Feet	Inches	Feet	Inches	Feet	Inches
0	100	100	2.58	100	3.18	100	3.56	100	4.05
32	100	100	2.19	100	2.79	100	3.18	100	3.67
64	100	100	1.81	100	2.41	100	2.79	100	3.28

TABLE LX—VALUES OF PIPE COVERINGS

Name	Maker	B. T. U. loss per sq. ft. pipe surface per minute	Per cent. or ratio of loss to loss from bare pipe	Thickness in inches	Weight in ounces per ft. of length, 4 in. diam.
Nonpareil Cork Standard...	Nonpareil Cork Co....	2.20	15.9	1.00	27
Nonpareil Cork Octagonal..	Nonpareil Cork Co....	2.38	17.2	.80	16
Manville High Pressure.....	Manville Covering Co.	2.38	17.2	1.25	54
Magnesia.....	Keasby & Mattison Co.	2.45	17.7	1.12	35
Imperial Asbestos.....	H. F. Watson.....	2.49	18.0	1.12	45
"W. B.".....	H. F. Watson.....	2.62	18.9	1.12	59
Asbestos Air Cell.....	Asbestos Paper Co....	2.77	20 0	1.12	35
Manville Infusorial Earth...	Manville Covering Co.	2.80	20.2	1.50	..
Manville Low Pressure.....	Manville Covering Co.	2.87	20.7	1.25	..
Manville Magnesia Asbestos	Manville Covering Co.	2.88	20.8	1.50	65
Magnabestos.....	Keasby & Mattison Co.	2.91	21.0	1.12	48
Moulded Sectional.....	H. F. Watson.....	3.00	21.7	1.12	41
Asbestos Fire Board.....	Asbestos Paper Co....	3.33	24.1	1.12	35
Calcite.....	Philip Carey Co.....	3.61	26.1	1.12	66
Bare Pipe.....	.....	13.84	100.		

Pipe Coverings—Hot water pipes and hot water tanks that are uncovered lose by radiation from their surface about 13 B. T. U. per minute per square foot of surface. To prevent this loss of heat and consequent extra

consumption of coal, hot water pipes, circulation pipes, and hot water tanks in large installations are usually covered with some non-heat conducting substance.

The relative values of different makes of pipe coverings, as determined by tests conducted by Charles L. Norton, of the Massachusetts Institute of Technology, for the Mutual Boiler Insurance Co., of Boston, can be found in Table LX.

Carbonate of magnesia is a very poor conductor of heat, therefore it is a good material for covering hot water pipes. The name "Magnesia," however, is often applied to pipe coverings made of carbonate of lime, or of plaster of paris. The following table shows the percentage of lime and magnesia found by C. L. Norton in several well-known brands of "Magnesia" coverings:

TABLE LXI—LIME AND MAGNESIA IN PIPE COVERINGS

Name	Percentage Composition	
	$Mg.CO_3$ Carbonate of Magnesia	$Ca.SO_4$ Sulphate of Calcium
K. & M. Magnesia	80 to 90	3
Manville H. P. Lining	Less than 5	65 to 75
Watson Moulded	20 to 25	50 to 60
Carey Calcite	Less than 5	75
Manville Magnesia Asbestos	10 to 15	None

Data on pipe covering taken from Circular No. 6 of the Mutual Boiler Insurance Company, of Boston.

Mineral wool, which was always considered a good covering, was not reported upon by the above experimenter, for the reason that mineral wool is of no value as a heat retardant.

"Under vibration it is apt to become more and more massed into a semi-solid, leaving the top of a pipe partially covered, the under side of the covering more and more solid and therefore less effective. It is a dangerous material to handle and to use. The fine dust getting under the nails creates irritation and sometimes bad sores, or, passing

into the bronchial tubes and the lungs, sometimes causes hemorrhage."

The conclusions to which we have been led by the tests on which report is now made, are as follows:

There are a sufficient number of safe, suitable and incombustible coverings for steam pipes and boilers to maintain a reasonable and adequate competition, without giving regard to any of the composite pipe coverings which contain combustible material in greater or less quantity, according to the integrity of the makers, and without giving regard to pipe coverings which contain substances like the sulphate of lime, which may cause the dangerous corrosion of the metal against which it is placed. We therefore name as the pipe and boiler coverings which may have the preference in respect to safety from fire and efficiency in service, the following makes:

Name	Made by
Nonpareil Cork.....	Nonpareil Cork Co., Bridgeport, Conn.
Magnesia	Keasby & Mattison Co., Ambler, Pa.
Asbestos Air Cell.....	Asbestos Paper Co., Boston.
Imperial Asbestos.....	H. F. Watson Co., Erie, Pa.

Hair felt and wool felt when new are good heat retardants, but deteriorate with age, and besides furnish a breeding place for house bugs and vermin.

The value of pipe coverings is not proportional to its thickness. Sectional pipe coverings average about 1⅜ inches in thickness and reduce the loss by radiation about 90 per cent., doubling the thickness of pipe covering only saves about another 5 per cent. of heat loss. In specifying covering for pipes and boilers, therefore, a thickness of 1⅜ inches will be sufficient.

Covering for Tanks—On account of the objectionable appearance they would present, range boilers are seldom covered to prevent loss of heat by radiation. Hot water tanks, however, are usually located in the basement or cellar where appearance is of less importance than the

prevention of loss of heat, therefore they should be covered with about 1⅜ inches of some good non-heat conducting covering. Tanks are generally covered with plastic asbestos troweled over a band of expanded metal, or asbestos blocks, Fig. 139, held in place by a wire netting.

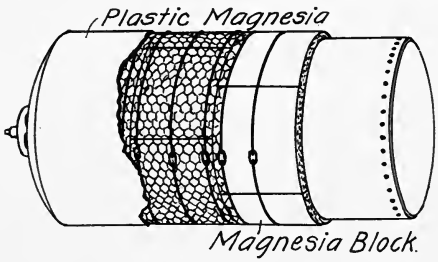

Fig. 139

PLUMBING FIXTURES

CLASSIFICATION OF FIXTURES

INTRODUCTORY REMARKS

Plumbing fixtures are here considered solely from a sanitary point of view. Types are discussed but not the various modifications or makes. Those may be seen in the show rooms of plumbing supply houses or very natural illustrations of them can be seen in plumbing supply catalogues.

Plumbing fixtures are receptacles for soil and waste water from which it is discharged into the drainage system. There are several classes of fixtures, each fixture being classified according to its use. Thus: Soil fixtures include water closets, urinals, school sinks, bidets, slop sinks, and all other fixtures into which soil is discharged. Scullery fixtures include kitchen sinks, pantry sinks, laundry tubs, and any fixture used in the preparation of meals or washing of household goods. Laving fixtures include wash basins, bath tubs, needle, shower and spray baths, and any fixture used for cleansing the person. Clean water fixtures like drinking fountains form a group by themselves.

Requirements of Sanitary Fixtures—To be perfectly sanitary, plumbing fixtures must be made of some non-absorbent, non-corrosive material that is not easily cracked, crazed or broken, and that has perfectly smooth surfaces to which soil will not adhere so firmly that it cannot be removed by a flush of water. Outlets to fixtures should be as large or larger than the waste pipe and should be unobstructed by strainers or cross-bars, so that the waste pipe will receive a scourging flush at each discharge of the fixture. Fixtures that are provided with stoppers for the waste outlet should have overflows to prevent water overflowing the fixture when the stopper is in place. Fixtures should be set open, that is, perfectly free from enclosing

woodwork or other casings that would cut off light and air. They should be well supplied with water for flushing, and in public places the walls and floor where they are set should be lined with some non-absorbent material.

SOIL FIXTURES

WATER CLOSETS

Requirements of a Sanitary Closet—To be efficient and sanitary, a water closet should be made of porcelain enameled iron or of porcelain, and must be absolutely free from working mechanism within the receptacle. It must contain a sufficient depth of water to completely cover any excremental matter deposited in it, so as to prevent odor. It must have no surfaces that can become soiled or that are not thoroughly water scoured every time the fixture is flushed. It must be supplied at each discharge with a sufficient volume of water to remove the entire contents of the bowl and trap and replace it with fresh water. The water should be discharged into the closet suddenly, with force, and in a large volume.

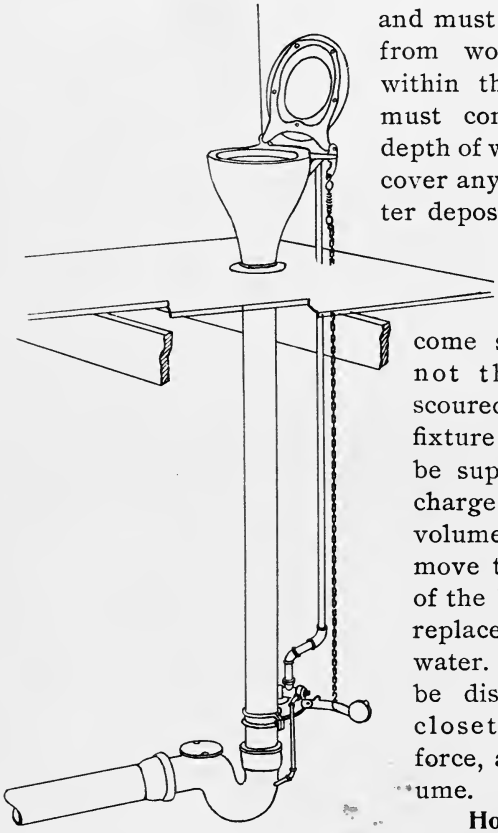

Fig. 140

Hopper Closets—The simplest form of water closet is a hopper closet, shown in Fig. 140. It consists

of a funnel or hopper-shaped bowl fitted with a flushing rim or pipe-wash connection. This type of closet contains no water in the bowl and the converging sides are dry and present the maximum surface to be soiled. Hopper closets are installed principally in exposed places where other types of closets that contain water would be damaged by the frost. When thus installed the closet trap and water supply valve are located in a pit below frost level, and after each flush of the fixture the water is automatically drained from the flush pipe down to the valve. When fitted up in this manner the entire inner surface of the pipe, from the hopper to the trap, sometimes becomes covered with a coating of bacterial slime that in warm weather gives off a very disagreeable odor. Hopper closets located in warm places should be flushed from a tank or flush valve and should have the trap placed as close as possible to the closet bowl.

Washout Water Closets—A washout water closet is shown in section in Fig. 141. The body of water in this type of closet is so shallow that fæcal matter is not submerged, consequently it gives off offensive odors. Should the bowl be made deep enough to submerge the fæces, the flush of water would not have sufficient force to remove it from the bowl. The action of the closet when operated is as follows: Water flowing through the flushing rim and closet bowl converges toward the inlet to the closet trap. The largest volume of water sweeps down the

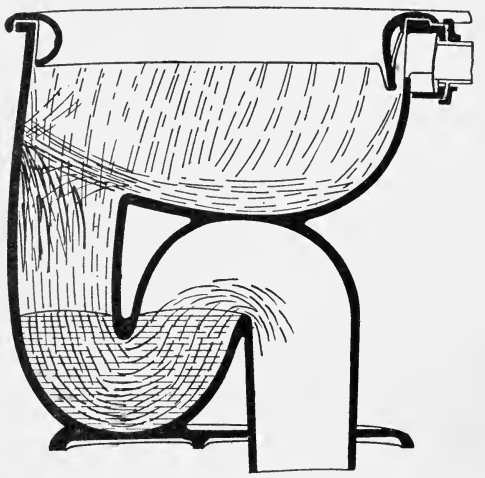

Fig. 141

back to dislodge all matter from the bowl, while the lighter flush at the sides serves to detach any soil from the rest of the surface. The water leaves the bowl with a slight upward motion due to the shape of the bottom of the bowl, and is dashed against the front wall of the closet outlet, which deprives it of its momentum. The only force the water then has to wash matter out of the trap is the momentum it acquires in falling from where it was dashed against the side of the bowl to the surface of water in the trap; consequently, if a large volume of water is not used, particles of matter will be left floating in the water of the trap where it sometimes remains for a long period of time, giving off offensive odors until finally displaced. The outlet to a washout closet is usually at the front, so that a person standing before the closet does not notice the filthy condition of the outlet, the sides of which are often foul with bacterial slime. When a washout closet is flushed, the upward force of water in the bowl discharges foul air from the closet into the room. This objectionable feature can be observed by standing in front of a washout closet at the moment the chain is pulled.

Washdown Water Closets—When properly designed, washdown closets, Fig. 142, are quite sanitary. They are clean, impervious, well flushed and contain a sufficient depth of water to prevent odors. The flushing rim is large and has numerous well-proportioned perforations through which a

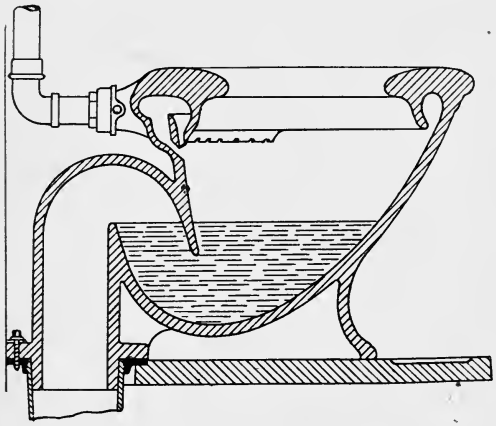

Fig. 142

copious flush of water flows down and floods the contents from the closet. Washdown closets are open to the objection that they are noisy in operation and are often designed as in Fig. 143, so that the surface, *a*, which is not submerged, is generally soiled and unsightly.

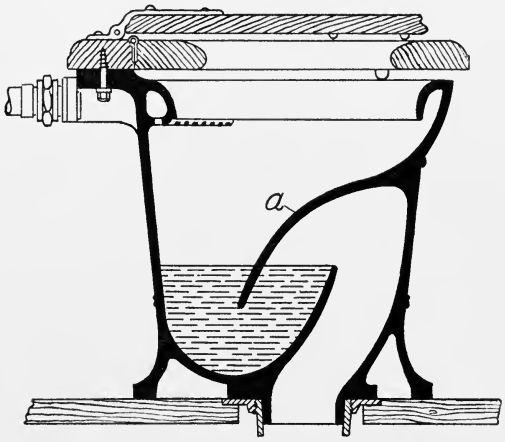

Fig. 143

Siphon-jet Closets—The best type of water closet yet designed, is the siphon-jet closet shown in section in Fig. 144. This closet is vitreous, smooth, impervious and contains a large body of water in a receptacle so shaped that it cannot easily be soiled. In operation it is almost noiseless.

The operation of a siphon-jet closet is as follows:

The flushing water parts upon entering the closet; some of it enters the flush rim and cleanses the bowl, while the rest of it flows through the jet, *a*, and ejects the water from the closet. The ejected water enters the outlet leg, *b*, of the closet which is usually rifled,

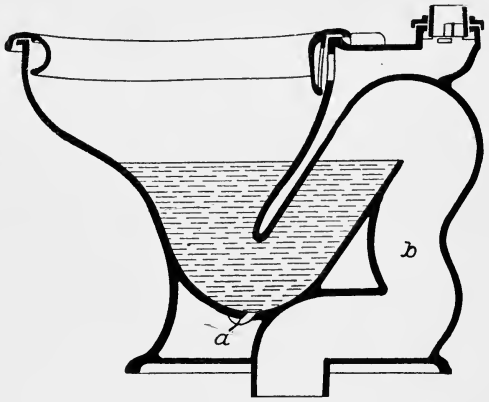

Fig. 144

choked, or in some way has a constricted outlet that can be easily filled with water. When the outlet leg becomes filled it acts as the long leg of a siphon, and thus siphons the contents of the bowl into the soil pipe. Once the siphonic action is started it continues until the bowl is empty and enough air has entered the pipe to prevent further siphonage. The closet is then refilled by the after-wash from the tank or flush valve.

As the contents of a siphon-jet closet are ejected by the pressure of the atmosphere on the surface of the water in the bowl, it follows that a considerable volume of air from in and around the closet will be carried into the soil pipe at each discharge, thus carrying off the most impure air from around the closet.

Water Closet Seats—Water closets should never be enclosed with woodwork; all except the very cheapest closets are now made with lugs to which seats can be attached. When not so constructed, the seat can be fastened to the wall and supported by brackets or legs, leaving the space beneath open to light and air. Seats are made with and without covers; when seats only are specified, it does not include covers.

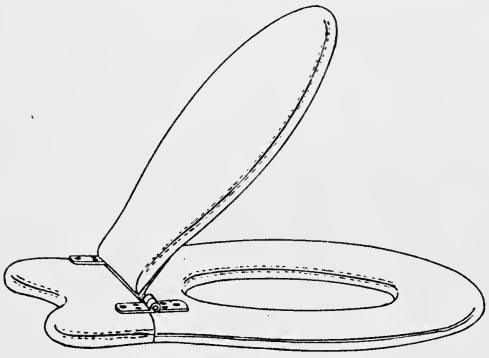

Fig. 145

Closet seats should be about one inch thick, finished natural wood with two or more coats of good spar varnish. Some seats are made of soft wood and finished with white enamel paint. This practice cannot be recommended, however, as urine and vapors about a closet discolor the paint and make the seat unsightly.

A particular part of a water closet seat are the hinges.

Some manufacturers use a light pattern hinge of iron or thin sheet brass that corrodes, becomes stiff and is soon broken off.

A good seat for the cheapest grade of closets is shown in Fig. 145. It is attached to the closet bowl from below by lag screws or bolts passing through lugs moulded on the closet. The metal of this type of hinge should be at least one-eighth inch thick, with joints loose enough for the hinge to work freely. Better hinges are shown on the seat and cover in Fig. 146. They are made of cast brass about one-half inch in diameter, and are strong, easy working and neat appearing.

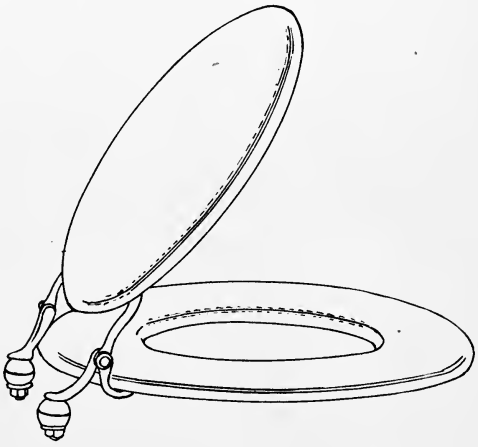

Fig. 146

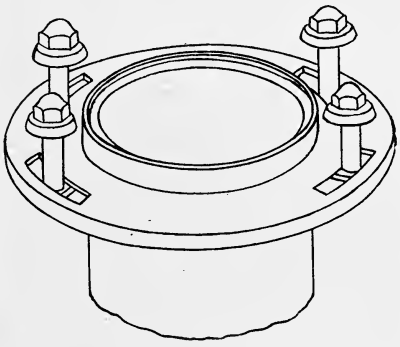

Fig. 147

Soil Pipe Connection to Closets—The usual method of fastening water closets to the lead soil pipe is to solder a brass floor flange, Fig. 147, to the lead soil pipe and then secure the closet to the floor flange by means of brass bolts. A paste made by mixing putty with red or white lead is placed between the two flanges to make a gas and watertight joint. An improved form of closet connection, Fig. 148, that does away with the putty joint is now extensively used. It makes a

metal to metal connection between the closet and floor flanges. The construction of this closet connection is simply a brass-flanged nipple, *a*, securely fastened to the closet flange, *b*, by means of brass bolts, *c*, and a lead-caulked joint, *d*. The joint is made water tight by a hard setting cement placed between the flanges of the nipple and the closet. A brass coupling, *e*, is soldered into the soil pipe, *f*, and the closet nipple screwed down tight into the coupling.

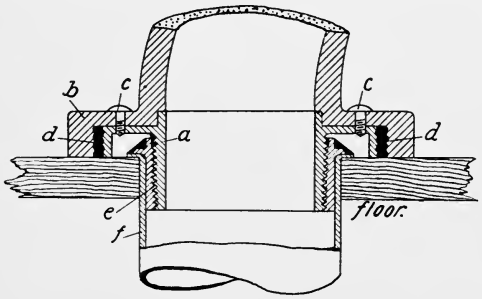

Fig. 148

Flush Pipes are generally made of lead pipe or of brass tubing; if of brass tubing, they may be either plain or nickel-plated. Flush pipes should never be less than 1¼ inches inside diameter, and for siphon-jet and wash-down closets they should be at least 1⅜ inches inside diameter. On the better classes of work flush pipes are connected to the closet bowl by means of brass slip joints. For cheaper work, rubber couplings make a good connection. They are strong, flexible, easily replaced, and often by their elasticity protect the closet horn from being broken when the flush pipe or closet receives a jar.

Flush Tanks—Water closets should always be flushed with water from a flush tank, or through a specially constructed flush valve of large area that is supplied with water through a distributing system separate from the one that supplies the other fixtures in the building. There are three reasons for these requirements: First, the flush pipe or flush valve will be of sufficient size to supply a large volume of water in a short period of time, thus insuring a good flush; second, the tank can be proportioned or the flush valve regulated to furnish a certain quantity of water at each flush; and third, when connected in this manner

and the water is shut off from the building, opening a faucet at a lower level cannot siphon foul air or water from the closet bowls into the supply pipes and afterward discharge it at other fixtures.

Flush tanks are made with capacities ranging from 6 to 12 gallons. In large city apartment houses, hotels and like buildings, where a considerable volume of water is generally flowing through the house drain, tanks of smaller capacity may be used than would be required in private houses or in large country institutions that are located a considerable distance from a trunk sewer or other place of sewage disposal. The reason for this is that in large city buildings if a sufficient volume of water is provided in closet tank or flush valve to discharge the contents of a closet into the soil stack, it will fall by gravity to the house drain, where assisted by the flowing water in the drain, it will be carried to the street sewer. On the other hand, assistance from other sources cannot be depended upon in private buildings and country institutions, so a sufficient volume of water must be provided that will carry the contents of the closet bowl all the way to the street sewer. Closet tanks with siphon flush valves are generally used in connection with washdown, washout and hopper closets,

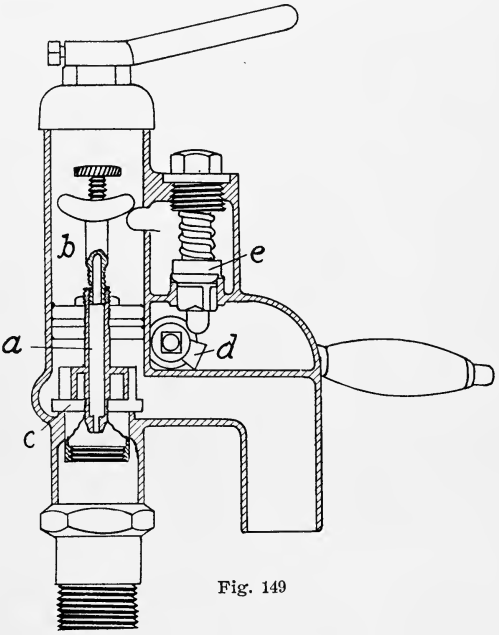

Fig. 149

LIBRARY

while slow-closing flush valves are used with siphon jet combinations. To insure sufficient force to thoroughly scour and flush a closet bowl, flush tanks must be set at least seven feet from the floor to the bottom of tank.

Flush Valves—A valve for flushing water closets, urinals or slop sinks is shown in section in Fig. 149. It is known as the Vimometer and is operated in the following manner: When not in operation the parts are all in position shown in the illustration, and water which has flowed up through the hollow stem, *a*, fills the chamber, *b*, thus equalizing the pressure on both sides of the valve seat, *c*. When the handle of the valve is raised, the eccentric, *d*, opens the relief valve, *e*, which relieves the pressure in the chamber, *b*, and the pressure of water then unseats the valve, *c*, and flows to the closet bowl. When the handle is released it drops back into place thus allowing the relief valve to close. Water flowing through the hollow stem then equalizes the pressure in chamber, *b*, so the valve can seat by gravity. A fine mesh strainer covers the opening to the hollow stem, *a*, to keep out foreign matter which might clog the opening.

Flush valves cannot be successfully used unless there is sufficient volume and pressure to operate them. For high-pressure service they require a head of at least twenty feet; where this head is unavailable, special low-pressure valves should be used.

Vimometer valves can be regulated to discharge almost any desired quantity of water at each flush of a fixture. The usual amounts vary from 6 to 12 gallons, which are discharged in from 9 to 15 seconds' time. If the service pipe is not large enough to supply this quantity of water within the required time a flush valve cannot be successfully used.

Flush valves require a separate system of piping to supply them with water, their use is therefore confined almost entirely to buildings in which a large number of closets are installed. A separate tank to supply the water closets and urinals is usually provided, and in small installa-

tions where the number of fixtures are few, storage provision should be made for at least twice the quantity of water that can be discharged by all closets at one flush. When there are a great number of closets to be supplied, this rule need not be strictly adhered to, although it is better in all cases to install a tank with a capacity of at least two days' supply to guard against any interruption of pump or service.

Size of Pipes for Vimometers—Care must be taken when installing vimometer systems to proportion the pipes so each valve will have an adequate supply of water. No pipe in the system should be smaller than 1½ inches in diameter, and four closets is the greatest number a 1½-inch pipe will supply. When there are more than four closets in an installation, a safe rule is to allow in the supply main the capacity of 1-inch pipe for each closet. If, however, there is a greater number of closets than 100, it can be assumed that all will not be operating at the same time and an allowance of the capacity of 1-inch pipe be made for the greatest probable number that will be operated simultaneously.

EXAMPLE—What size of water main will be required to supply twenty-one vimometer valves?

SOLUTION—Required a pipe having the capacity of twenty-one 1-inch pipes, and Table XXXVI shows that a 3-inch pipe has a capacity of 20.9 one-inch pipes, therefore a 3-inch pipe should be used.

Low-down Combinations in which the closet tank is located at only a slight elevation above the level of the bowl are now quite extensively installed, particularly under stairways or where windows or other building details take the wall space required for an ordinary closet tank and flush pipe. The flush connection of a low-down combination is of much larger area than of an ordinary high tank closet, as the low-down combination has to supply in volume what it lacks in velocity. Low-down combinations are quite noiseless in operation and generally are satisfactory.

School Sinks and Latrine Troughs are sometimes installed in schools, barracks, hospitals and like institutions

They are very unsanitary in construction and violate almost every known sanitary requirement for a plumbing fixture. Oftentimes they are made of plain iron that corrodes and becomes foul smelling; frequently they are encased in woodwork that shuts out light and air, and that becomes filthy from deposits of soil and foul from saturation of urine; they furnish breeding places for bacteria and vermin, and worst of all, sometimes retain for hours rank and putrid substances that should be immediately removed from sense of sight and smell. Porcelain-lined iron water closets are made that are particularly adapted for hospital barracks, schools and public toilet rooms, where great strength and durability are required in a fixture, and one that can easily be cleansed with hose and broom without damage to any part. The closets are enameled both inside and out, can be had in washout, washdown or siphon-jet types, and combining as they do great strength with a durable porcelain surface, are practically indestructible.

Ventilation of Closet Compartments—Rooms in which water closets are situated should be well ventilated to insure a frequent change of air. This requirement is absolute in large toilet rooms containing many washout or other non-deodorizing closets.

A method of ventilating closet compartments is shown in Fig. 150. The separate flues in this system should never be less than 6 inches in diameter, and when possible to place a small steam or hot water coil in the bottom of each flue, the direction of the current of air is made positive. Ventilation flues from different compartments should

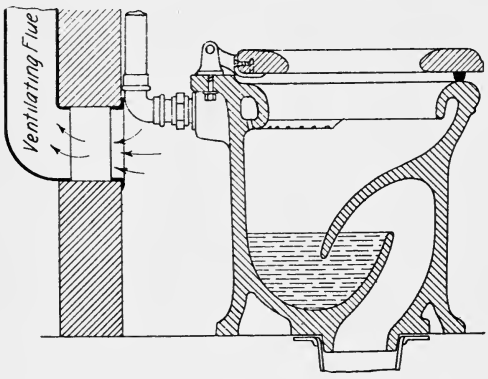

Fig. 150

extend separately through the roof; when joined to flues from other rooms they serve as sound conductors from one room to another.

Local vents from closets should not be used in lieu of ventilating the compartment. A local vent is a small pipe of from 1½ to 2 inches in diameter that is connected to the bowl of a closet and extends through the roof. They are so unsatisfactory that in practice they are seldom used.

Bidets—A bidet, Fig. 151, is a form of sitting bath for use after using the closet, and for the administration of injections and treatment of hæmorrhoids. They are made of porcelain enameled iron, and of porcelain, with a simple waste connection or with a unique waste so that a body of water can be held in the bowl.

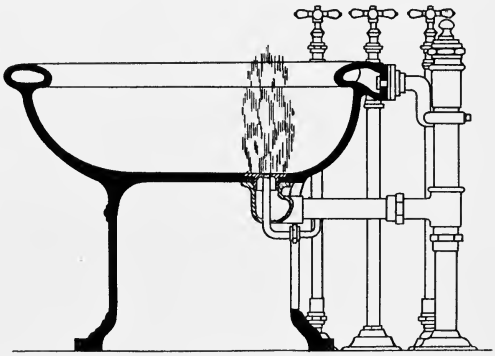

Fig. 151

The supply pipe to bidet baths is always so arranged that hot water cannot be turned on without also turning on the cold, although cold water can be drawn without turning on the hot water. This arrangement of valves makes it impossible for anyone to be scalded while using the fixture.

Bidet attachments are made that can be attached to a closet bowl. While these are very convenient they are not as satisfactory as a bidet fixture, without which no bathroom is complete.

Urinals should be made from the least absorbent and least corrosive of materials, and all exposed connections, walls, floor and partition, should be equally non-absorbent and non-corrosive. If the urinals or surroundings are absorbent they will soon become saturated with urine and emit a most pungent and disagreeable odor. If made of

corrosive materials they will be energetically attacked and destroyed by the urine.

The simplest type of urinal is a Bedfordshire flat-back urinal, either plain or lipped; the lipped, Fig. 152, being the better form. Urinals of this type are provided with a perforated outlet and the better grades have an overflow molded in the bowl to prevent an overflow should the perforated outlets be stopped. This type of urinal is usually flushed direct from the water supply and the flow of water is controlled by a compression stop cock. A flushing rim, extending around the opening to the bowl, admits water to all parts and insures a good flush. The objections to this type of urinal are: First, the perforated outlet prevents a thorough scouring of the waste pipe when the urinal is flushed; second, the connections are exposed and cannot easily be kept clean; third, there is too much dry surface to the bowl; fourth, the flushing cock is seldom if ever turned on by the person using the fixture.

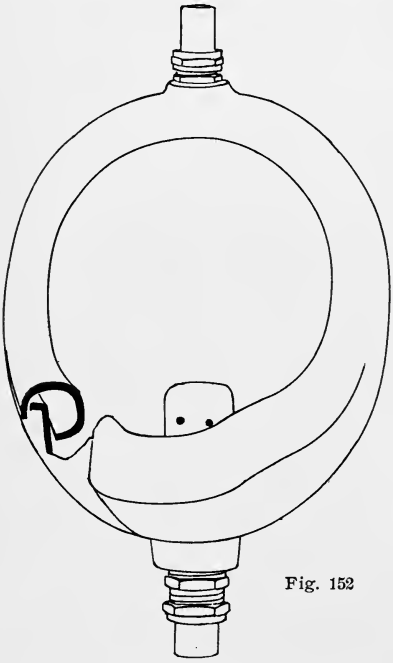

Fig. 152

An improvement on the Bedfordshire urinal is shown in section in Fig. 153. The improvement consists of first, a wide open outlet that permits a scouring flush of the waste pipe; second, a large flush connection and flushing rim to permit a copious flush of water; third, a flush connection suitable only for a flush tank or flush valve, and fourth, no exposed metal connections. This type of urinal is made with a trap also forming part of the bowl, and is a slight

improvement on the other one shown.

Siphon-jet Urinals, Fig. 154, are the most sanitary type of urinals. In addition to all the good qualities possessed by the other types, they contain a large body of water to chill, deodorize and dilute the urine, which is siphoned from the bowl at each discharge of the fixture.

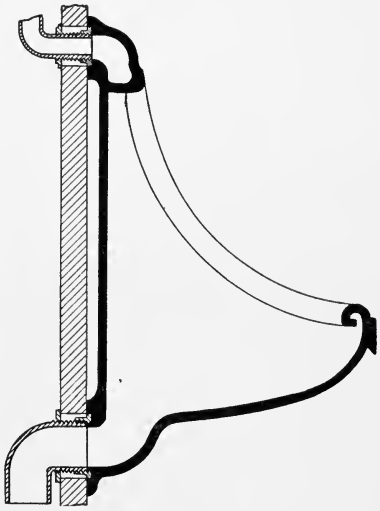

Fig. 153

Stall Urinals— Urinals made of marble, porcelain or slate in the form of stalls with a grooved floor slab draining to a gutter at the rear and a perforated pipe or fan to spread a thin sheet of water down the back slab, are sometimes used. Under some conditions, particularly where water is plentiful, they are fairly satisfactory, but as a rule they are not perfectly sanitary. Marble and slate each to a slight degree is absorbent. There are many joints and crevices about the stalls to foul, and such urinals are very extravagant in the use of water.

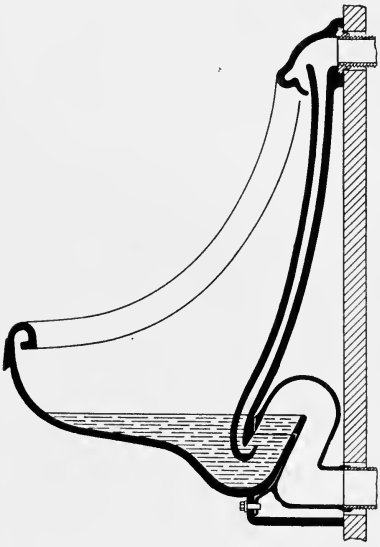

Fig. 154

Urinal Flush Tanks— The improved types of urinals are generally flushed from urinal tanks or through flush valves similar to closet flush valves, only of smaller

size. Where water is plentiful, or in insane asylums or other institutions where the inmates cannot be depended on to flush the urinals, automatic flush tanks will be found effective for this purpose. Automatic flush tanks can be so adjusted that they will discharge at any desired interval of time.

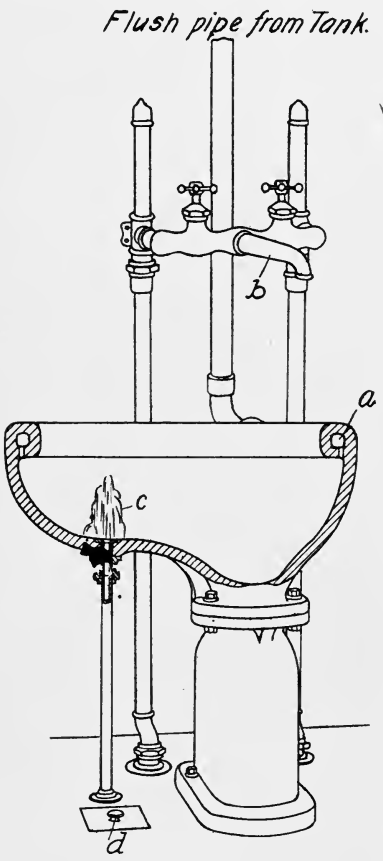

Fig. 155

Slop Sinks—A slop sink at which to draw water for scrubbing and general cleaning and in which to empty soiled scrubbing water and other slops, should be provided in every building. In a cottage a slop sink on the second floor will often save the cost of the fixture by protecting the bath tub and water closet from the wear and tear incident to using them for drawing and emptying scrub water and slops. Hotels, office buildings and other large institutions should have one or more slop sinks on each floor, and in hospitals slop sinks are indispensable on all floors.

It is evident from the uses of a slop sink that it should be supplied with hot and cold water, and in addition, hospital slop sinks should be flushed from an overhead tank or from a flush valve. The contents of bed-pans are emptied into hospital sinks, so that to a certain extent they partake of the functions of a water closet and must therefore be made and operated like one. The outlet to slop sinks should be unobstructed by strainers or cross bars, so the

waste pipe will receive a good flush. In the case of hospital sinks this requirement is absolute, on account of its dual function.

Slop sinks are usually made 10 to 12 inches deep and from 20 to 24 inches square. They are made both of iron and of porcelain. Iron slop sinks are made either plain, galvanized or porcelain lined.

Hospital Slop Sinks—A hospital slop sink is shown in Fig. 155. The bowl of the sink is shaped like a closet bowl converging toward the outlet which is large and unobstructed by a strainer. The sink is flushed through a flushing rim, *a*, from a tank overhead or from a vimometer valve, and is also supplied with hot and cold water through a combination cock, *b*. The slop sink is also fitted with a cleansing jet, *c*, to which the water may be turned on by hand valves at the back of the sink or by the foot valves, *d*, on the floor. The nurse or orderly empties the contents of a bed-pan on the right side of the sink which is flushed from the tank, the bed-pan is then inverted and held over the cleansing jet in the left side of the bowl to be washed.

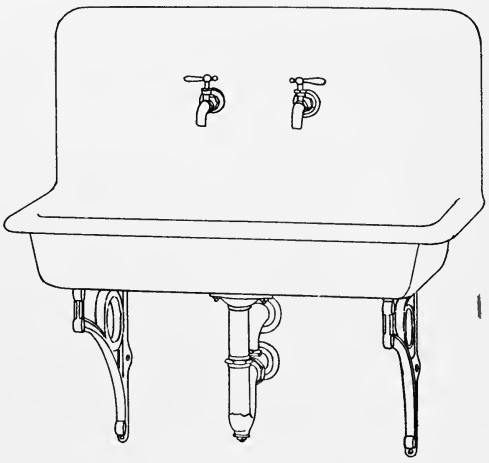

Fig. 156

SCULLERY FIXTURES

SINKS

Kitchen Sinks—Sinks may be divided into two classes, kitchen sinks and pantry sinks. Kitchen sinks are located in the kitchen and are used in the preparation of meals, washing of dishes and other duties incidental to kitchen

work. The best sinks are made of porcelain enameled iron and of porcelain. They range in sizes from 12½ x 16½ x 5 inches to 22 x 120 x 6 inches.

A type of kitchen sink that is extensively used is shown in Fig. 156. It is known as a roll rim porcelain-lined iron sink, and may be had enameled both inside and out, or only on the inside. Porcelain-lined sinks are strong, durable and will not craze. Furthermore, they are perfectly sanitary and of moderate cost.

PANTRY SINKS

Copper Pantry Sinks—Pantry sinks are made of copper and of porcelain. They are used chiefly in cleaning silverware, cut glass and china, also for drawing water for table use. Copper sinks are made in oval and square patterns and are set in a frame work of wood and furnished with a wooden top. Sometimes copper sinks are set in a box containing soft plaster paris, so that when the plaster hardens the sink will have a solid bearing to prevent the copper becoming easily dented. Oval pantry sinks are pressed out of one piece of sheet copper and have a waste pipe and overflow tube soldered on. Square pantry sinks are made of two or more pieces of sheet copper locked and soldered together. Like the oval pattern, square sinks have waste pipes and overflow tubes soldered on.

Copper pantry sinks are quite extensively used at the present time owing to their apparent cheapness. They are slightly objectionable, however, on account of the large amount of woodwork required to encase them; the filthy joint that is left between the flange of the sink and wooden top; and the poor waste and overflow connections that generally are made with a putty joint.

Porcelain Pantry Sinks are more sanitary and are better appearing than copper sinks. They are sometimes objected to on the ground that they are more destructive than copper sinks to china or glassware accidentally dropped in the sink. This objection can now be overcome by using a rubber mat or a wooden grating on the bottom of the sink.

LAUNDRY TRAYS

Laundry Trays, Fig. 157, are used to wash clothes in. There are three tubs in a full set, and when properly installed they are supplied with hot and cold water and are

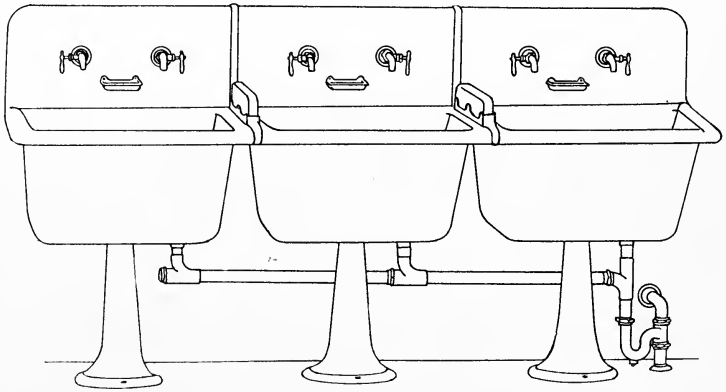

Fig. 157

connected by a waste pipe to the drainage system. When laundry trays are located on any floor above the basement,

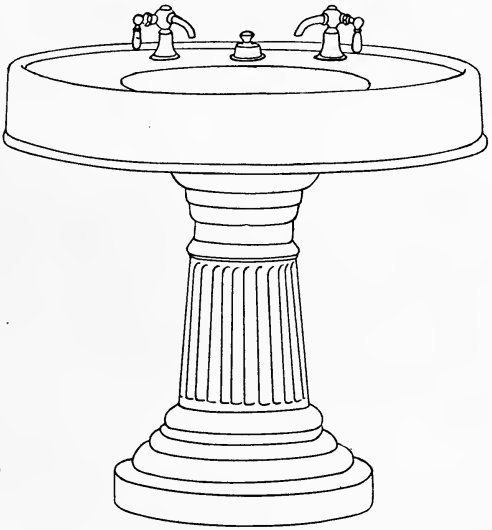

Fig. 158

they should each be provided with an overflow pipe to prevent water overflowing and damaging the ceilings below. When located in a kitchen they should be provided with covers to conceal soiled clothes when soaking, and to provide table space on top of the tubs. In large apartment houses a general laundry is sometimes fitted up in the basement; when such is the case a single tub should also be installed in each of the apartments for the tenant to do light washing in.

Laving Fixtures

Lavatories

Sanitary Requirements—The principal sanitary requirements of lavatories are a smooth, impervious service, large unobstructed outlet, an overflow channel accessible for cleaning and no crevices for the retention of dirt. Porcelain-lined iron and porcelain lavatories fulfill all of the

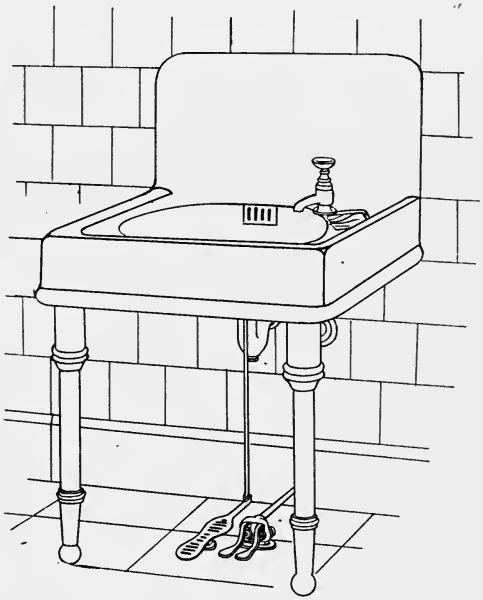

Fig. 159

requirements, and being made in one piece are the highest types of sanitary fixtures.

A one-piece porcelain enameled iron lavatory is shown in Fig. 158. There are no joints or crevices to a fixture of

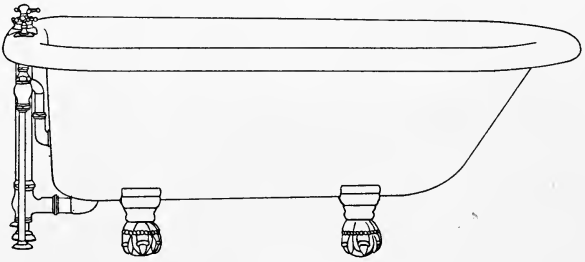

Fig. 160.

this kind where filth can lodge, as is possible with a marble top lavatory.

Hospital Lavatory—A lavatory suitable for hospital operating rooms is shown in Fig. 159. A hospital lavatory differs from a common type only in the manner of operating the supply and waste valves. This is accomplished by means of levers attached to the floor and operated by foot. A hospital lavatory should be supplied with hot and cold

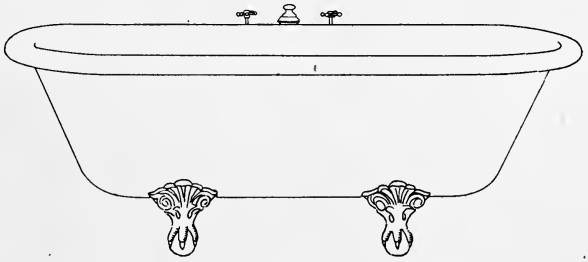

Fig. 161

water through a combination cock so that water of any desired temperature can be drawn.

Bath Tubs—The most extensively used and most serviceable bath tub is the porcelain enameled tub. They are made in two designs, known as French pattern, Fig. 160, and as Roman pattern, Fig. 161. The differences in shape

are clearly shown in the illustrations. Bath tubs are not suitable for general use in barracks, hospitals and like in-

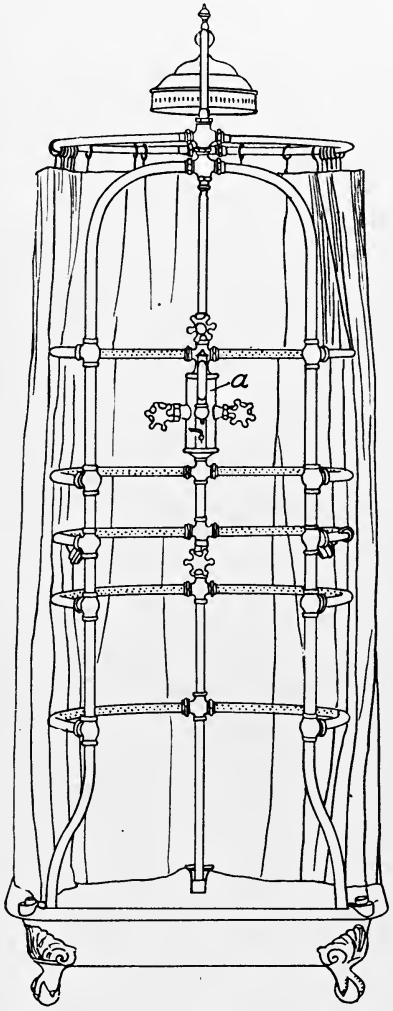

Fig. 162

stitutions, on account of the length of time required to prepare the tub for use and the liability of spreading contagion if cleanliness is not strictly observed.

Shower and Rain Baths—For use in public and semi-public bathing establishments, shower and spray baths, Fig. 162, are the most suitable. They are always ready and permit the bather to wash in running water. Many designs of rain, shower and needle-shower and spray baths are made, some simple and some elaborate. Stock fixtures can be supplied to fill most any requirement. Mixing chambers, *a*, should be used with shower baths so the water can be heated to the required temperature before using. When a mixing chamber is omitted, the supply valves should be so arranged that hot water cannot be turned on without also turning on the cold water. This arrangement of valves will prevent bathers from being scalded by hot water.

Seat Baths — For the administration of injections, treatment of hemorrhoids and other like purposes, seat baths, Fig. 163, are particularly useful. They are almost indispensable in a well equipped bath room.

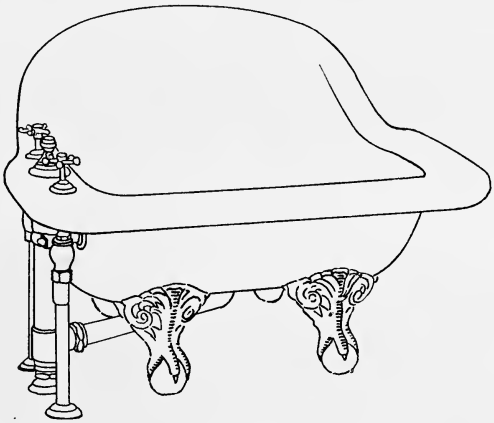

Fig. 163

Drinking Fountains — Stationary drinking fountains are required in the lobby or main corridor of hotels, large institutions, school buildings, etc. A common type of drinking fountain is shown in Fig. 164. It is open to the objection, however, that many persons drinking from a common cup might spread contagious diseases. A better

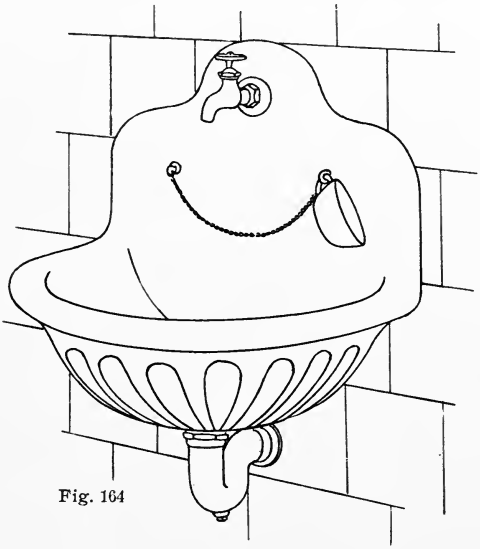

Fig. 164

type of fountain is shown in Fig. 165. With this fountain no cup is used, and the drinker partakes of running water by bending over and drinking from the fount.

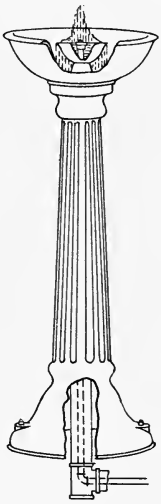

Fig. 165

APPENDIX

Decimal Fractions of a Foot—Measurements expressed in fractions of an inch can be converted into decimal fractions of a foot by the following rule :

RULE—Multiply the measurement expressed in fractions of an inch by $\frac{1}{12}$, and divide the numerator of the product by the denominator; the quotient will be the corresponding fraction of a foot expressed as a decimal.

EXAMPLE—Reduce $\frac{3}{4}$ inch to a decimal fraction of a foot.

SOLUTION—$\frac{3}{4} \times \frac{1}{12} = \frac{3}{48} = .0625$. Answer.

For convenience in reference, a table of decimal equivalents of a foot for each $\frac{1}{64}$ of an inch is appended.

TABLE LXII—DECIMALS OF A FOOT FOR EACH $\frac{1}{64}$ OF AN INCH

Inch	0 In.	1 In.	2 In.	3 In.	4 In.	5 In.	6 In.	7 In.	8 In.	9 In.	10 In.	11 In.
0	0	.0833	.1667	.2500	.3333	.4167	.5000	.5833	.6667	.7500	.8333	.9167
	.0013	.0846	.1680	.2513	.3346	.4180	.5013	.5846	.6680	.7513	.8346	.9180
1-32	.0026	.0859	.1693	.2526	.3359	.4193	.5026	.5859	.6693	.7526	.8359	.9193
	.0039	.0872	.1706	.2539	.3372	.4206	.5039	.5872	.6706	.7539	.8372	.9206
1-16	.0052	.0885	.1719	.2552	.3385	.4219	.5052	.5885	.6719	.7552	.8385	.9219
	.0065	.0898	.1732	.2565	.3398	.4232	.5065	.5898	.6732	.7565	.8398	.9232
3-32	.0078	.0911	.1745	.2578	.3411	.4245	.5078	.5911	.6745	.7578	.8411	.9245
	.0091	.0924	.1758	.2591	.3424	.4258	.5091	.5924	.6758	.7591	.8424	.9258
1-8	.0104	.0937	.1771	.2604	.3437	.4271	.5104	.5937	.6771	.7604	.8437	.9271
	.0117	.0951	.1784	.2617	.3451	.4284	.5117	.5951	.6784	.7617	.8451	.9284
5-32	.0130	.0964	.1797	.2630	.3464	.4297	.5130	.5964	.6797	.7630	.8464	.9297
	.0143	.0977	.1810	.2643	.3477	.4310	.5143	.5977	.6810	.7643	.8477	.9310
3-16	.0156	.0990	.1823	.2656	.3490	.4323	.5156	.5990	.6823	.7656	.8490	.9323
	.0169	.1003	.1836	.2669	.3503	.4336	.5169	.6003	.6836	.7669	.8503	.9336
7-32	.0182	.1016	.1849	.2682	.3516	.4349	.5182	.6016	.6849	.7682	.8516	.9349
	.0195	.1029	.1862	.2695	.3529	.4362	.5195	.6029	.6862	.7695	.8529	.9362
1-4	.0208	.1042	.1875	.2708	.3542	.4375	.5208	.6042	.6875	.7708	.8542	.9375
	.0221	.1055	.1888	.2721	.3555	.4388	.5221	.6055	.6888	.7721	.8555	.9388
9-32	.0234	.1068	.1901	.2734	.3568	.4401	.5234	.6068	.6901	.7734	.8568	.9401
	.0247	.1081	.1914	.2747	.3581	.4414	.5247	.6081	.6914	.7747	.8581	.9414
5-16	.0260	.1094	.1927	.2760	.3594	.4427	.5260	.6094	.6927	.7760	.8594	.9427
	.0273	.1107	.1940	.2773	.3607	.4440	.5273	.6107	.6940	.7773	.8607	.9440
11-32	.0286	.1120	.1953	.2786	.3620	.4453	.5286	.6120	.6953	.7786	.8620	.9453
	.0299	.1133	.1966	.2799	.3633	.4466	.5299	.6133	.6966	.7799	.8633	.9466
3-8	.0312	.1146	.1979	.2812	.3646	.4479	.5312	.6146	.6979	.7812	.8646	.9479
	.0326	.1159	.1992	.2826	.3659	.4492	.5326	.6159	.6992	.7826	.8659	.9492
13-32	.0339	.1172	.2005	.2839	.3672	.4505	.5339	.6172	.7005	.7839	.8672	.9505
	.0352	.1185	.2018	.2852	.3685	.4518	.5352	.6185	.7018	.7852	.8685	.9518
7-16	.0365	.1198	.2031	.2865	.3698	.4531	.5365	.6198	.7031	.7865	.8698	.9531
	.0378	.1211	.2044	.2878	.3711	.4544	.5378	.6211	.7044	.7878	.8711	.9544
15-32	.0391	.1224	.2057	.2891	.3724	.4557	.5391	.6224	.7057	.7891	.8724	.9557
	.0404	.1237	.2070	.2904	.3737	.4570	.5404	.6237	.7070	.7904	.8737	.9570
1-2	.0417	.1250	.2083	.2917	.3750	.4583	.5417	.6250	.7083	.7917	.8750	.9583
	.0430	.1263	.2096	.2930	.3763	.4596	.5430	.6263	.7096	.7930	.8763	.9596
17 32	.0443	.1276	.2109	.2943	.3776	.4609	.5443	.6276	.7109	.7943	.8776	.9609
	.0456	.1289	.2122	.2956	.3789	.4622	.5456	.6289	.7122	.7956	.8789	.9622
9-16	.0469	.1302	.2135	.2969	.3802	.4635	.5469	.6302	.7135	.7969	.8802	.9635
	.0482	.1315	.2148	.2982	.3815	.4648	.5482	.6315	.7148	.7982	.8815	.9648
19-32	.0495	.1328	.2161	.2995	.3828	.4661	.5495	.6328	.7161	.7995	.8828	.9661
	.0508	.1341	.2174	.3008	.3841	.4674	.5508	.6341	.7174	.8008	.8841	.9674

TABLE LXII—Continued

Inch	0 In.	1 In.	2 In.	3 In.	4 In.	5 In.	6 In.	7 In.	8 In.	9 In.	10 In.	11 In.
5-8	.0521	.1354	.2188	.3021	.3854	.4688	.5521	.6354	.7188	.8021	.8854	.9688
	.0534	.1367	.2201	.3034	.3867	.4701	.5534	.6367	.7201	.8034	.8867	.9701
21-32	.0547	.1380	.2214	.3047	.3880	.4714	.5547	.6380	.7214	.8047	.8880	.9714
	.0560	.1393	.2227	.3060	.3893	.4727	.5560	.6393	.7227	.8060	.8893	.9727
11-16	.0573	.1406	.2240	.3073	.3906	.4740	.5573	.6406	.7240	.8073	.8906	.9740
	.0586	.1419	.2253	.3086	.3919	.4753	.5586	.6419	.7253	.8086	.8919	.9753
23-32	.0599	.1432	.2266	.3099	.3932	.4766	.5599	.6432	.7266	.8099	.8932	.9766
	.0612	.1445	.2279	.3112	.3945	.4779	.5612	.6445	.7279	.8112	.8945	.9779
3-4	.0625	.1458	.2292	.3125	.3958	.4792	.5625	.6458	.7292	.8125	.8958	.9792
	.0638	.1471	.2305	.3138	.3971	.4805	.5638	.6471	.7305	.8138	.8971	.9805
25-32	.0651	.1484	.2318	.3151	.3984	.4818	.5651	.6484	.7318	.8151	.8984	.9818
	.0664	.1497	.2331	.3164	.3997	.4831	.5664	.6497	.7331	.8164	.8997	.9831
13-16	.0677	.1510	.2344	.3177	.4010	.4844	.5677	.6510	.7344	.8177	.9010	.9844
	.0690	.1523	.2357	.3190	.4023	.4857	.5690	.6523	.7357	.8190	.9023	.9857
27-32	.0703	.1536	.2370	.3203	.4036	.4870	.5703	.6536	.7370	.8203	.9036	.9870
	.0716	.1549	.2383	.3216	.4049	.4883	.5716	.6549	.7383	.8216	.9049	.9883
7-8	.0729	.1562	.2396	.3229	.4062	.4896	.5729	.6562	.7396	.8229	.9062	.9896
	.0742	.1576	.2409	.3242	.4076	.4909	.5742	.6576	.7409	.8242	.9076	.9909
29-32	.0755	.1589	.2422	.3255	.4089	.4922	.5755	.6589	.7422	.8255	.9089	.9922
	.0768	.1602	.2435	.3268	.4102	.4935	.5768	.6602	.7435	.8268	.9102	.9935
15-16	.0781	.1615	.2448	.3281	.4115	.4948	.5781	.6615	.7448	.8281	.9115	.9948
	.0794	.1628	.2461	.3294	.4128	.4961	.5794	.6628	.7461	.8294	.9128	.9961
31-32	.0807	.1641	.2474	.3307	.4141	.4974	.5807	.6641	.7474	.8307	.9141	.9974
	.0820	.1654	.2487	.3320	.4154	.4987	.5820	.6654	.7487	.8320	.9154	.9987
1	.....	.....	.....	.....	.....	.....	.....	.....	.....	.....	.....	1.0000

Decimal fractions of a foot can be converted to common fractions of an inch by reducing the decimal to a common fraction of lowest denomination and dividing it by $\frac{1}{12}$.

EXAMPLE—Reduce .0625 of a foot to a fraction of an inch.

SOLUTION—$.0625=\frac{625}{10000}=\frac{1}{16}$, and $\frac{1}{16}\div\frac{1}{12}=\frac{3}{4}$. Answer.

Decimal Equivalents of an Inch—Measurements that are expressed in fractions of an inch can be converted into decimal fractions by dividing the numerator by the denominator.

EXAMPLE—What is the decimal equivalent of $\frac{1}{8}$ of an inch?

SOLUTION—$\frac{1}{8}=1\div 8=.125$. Answer.

Fractions of an inch expressed as decimals can be converted to common fractions of an inch by changing the decimal to a common fraction, and then reducing it to its lowest terms. Decimals can be changed to common fractions by using the decimal for a numerator, and writing below it for denominator 1, with as many ciphers annexed as there are decimal places in the numerator.

EXAMPLE—Reduce .125 to a common fraction.

SOLUTION—$.125=\frac{125}{1000}=\frac{1}{8}$. Answer.

Decimal equivalents of fractions of an inch can be found in Table LXIII.

TABLE LXIII—DECIMAL EQUIVALENTS OF FRACTIONS OF AN INCH

8ths		32ds		64ths			
$\frac{1}{8}$ = .125	$\frac{9}{16}$ = .5625	$\frac{17}{32}$ = .53125	$\frac{9}{64}$ = .140625	$\frac{37}{64}$ = .578125
$\frac{2}{8}$ = .250	$\frac{11}{16}$ = .6875	$\frac{19}{32}$ = .59375	$\frac{11}{64}$ = .171875	$\frac{39}{64}$ = .609375
$\frac{3}{8}$ = .375	$\frac{13}{16}$ = .8125	$\frac{21}{32}$ = .65625	$\frac{13}{64}$ = .203125	$\frac{41}{64}$ = .640625
$\frac{4}{8}$ = .500	$\frac{15}{16}$ = .9375	$\frac{23}{32}$ = .71875	$\frac{15}{64}$ = .234375	$\frac{43}{64}$ = .671875
$\frac{5}{8}$ = .625		$\frac{25}{32}$ = .78125	$\frac{17}{64}$ = .265625	$\frac{45}{64}$ = .703125
$\frac{6}{8}$ = .750	32ds	$\frac{27}{32}$ = .84375	$\frac{19}{64}$ = .296875	$\frac{47}{64}$ = .734375
$\frac{7}{8}$ = .875	$\frac{1}{32}$ = .03125	$\frac{29}{32}$ = .90625	$\frac{21}{64}$ = .328125	$\frac{49}{64}$ = .765625
	$\frac{2}{32}$ = .09375	$\frac{31}{32}$ = .96875	$\frac{23}{64}$ = .359375	$\frac{51}{64}$ = .796875
16ths	$\frac{5}{32}$ = .15625		$\frac{25}{64}$ = .390625	$\frac{53}{64}$ = .828125
	$\frac{7}{32}$ = .21875	64ths	$\frac{27}{64}$ = .421875	$\frac{55}{64}$ = .859375
$\frac{1}{16}$ = .0625	$\frac{9}{32}$ = .28125	$\frac{1}{64}$ = .015625	$\frac{29}{64}$ = .453125	$\frac{57}{64}$ = .890625
$\frac{3}{16}$ = .1875	$\frac{11}{32}$ = .34375	$\frac{3}{64}$ = .046875	$\frac{31}{64}$ = .484375	$\frac{59}{64}$ = .921875
$\frac{5}{16}$ = .3125	$\frac{13}{32}$ = .40625	$\frac{5}{64}$ = .078125	$\frac{33}{64}$ = .515625	$\frac{61}{64}$ = .953125
$\frac{7}{16}$ = .4375	$\frac{15}{32}$ = .46875	$\frac{7}{64}$ = .109375	$\frac{35}{64}$ = .546875	$\frac{63}{64}$ = .984375

Decimals of a Square Foot—Measurements taken in square inches can be converted into decimals of a square foot by dividing the number of square inches by 144, which is the number of square inches contained in a square foot.

EXAMPLE—Express 20 square inches as a decimal of a square foot.

SOLUTION—20 square inches $=\frac{20}{144}=20\div 144=.138$. Answer.

Square inches expressed as decimals of a square foot can be found in Table LXIV.

TABLE LXIV—SQUARE INCHES IN DECIMALS OF A SQUARE FOOT

Square Inch	Square Foot	Square Inch	Square Foot	Square Inch	Square Foot	Square Inch	Square Foot
1	.00694	15	.10416	29	.20138	43	.29861
2	.01388	16	.11111	30	.20833	44	.30555
3	.02083	17	.11805	31	.21527	45	.31249
4	.02777	18	.12500	32	.22222	46	.31944
5	.03472	19	.13194	33	.22916	47	.32638
6	.04166	20	.13888	34	.23611	48	.33333
7	.04861	21	.14583	35	.24305	49	.34027
8	.05555	22	.15277	36	.25000	50	.34722
9	.06250	23	.15972	37	.25694	51	.35416
10	.06944	24	.16666	38	.26388	52	.36111
11	.07638	25	.17361	39	.27083	53	.36805
12	.08333	26	.18055	40	.27777	54	.37500
13	.09027	27	.18750	41	.28472	55	.38194
14	.09722	28	.19444	42	.29166	56	.38888

TABLE LXIV—Continued

Square Inch	Square Foot	Square Inch	Square Foot	Square Inch	Square Foot	Square Inch	Square Foot
57	.39583	79	.54861	101	.70138	123	.85416
58	.40277	80	.55555	102	.70833	124	.86111
59	.40972	81	.56249	103	.71527	125	.86805
60	.41666	82	.56944	104	.72222	126	.87500
61	.42361	83	.57638	105	.72916	127	.88194
62	.43055	84	.58333	106	.73611	128	.88888
63	.43750	85	.59027	107	.74305	129	.89583
64	.44444	86	.59722	108	.75000	130	.90277
65	.45138	87	.60416	109	.75694	131	.90972
66	.45833	88	.61111	110	.76388	132	.91666
67	.46527	89	.61805	111	.77083	133	.92361
68	.47222	90	.62500	112	.77777	134	.93055
69	.47916	91	.63194	113	.78472	135	.93750
70	.48611	92	.63888	114	.79166	136	.94444
71	.49305	93	.64583	115	.79861	137	.95138
72	.50000	94	.65277	116	.80555	138	.95833
73	.50694	95	.65972	117	.81249	139	.96527
74	.51388	96	.66666	118	.81944	140	.97222
75	.52083	97	.67361	119	.82638	141	.97916
76	.52777	98	.68055	120	.83333	142	.98611
77	.53472	99	.68750	121	.84027	143	.99305
78	.54166	100	.69444	122	.84722	144	1.00000

To reduce decimals of a square foot to square inches, multiply the decimal by 144.

EXAMPLE—Reduce .1388 of a foot to square inches.
SOLUTION—$.1388 \times 144 = 20$ square inches nearly. Answer.

Area of a Circle—To find the area of a circle, square the diameter and multiply by .7854. Squaring the diameter means multiplying the length of the diameter by itself.

EXAMPLE—What is the area of a circle having a diameter of 20 feet?
SOLUTION—$20 \times 20 \times .7854 = 314.16$ square feet. Answer.

Diameter of a Circle—When the area of a circle is known, the diameter can be found by dividing the area by .7854 and extracting the square root.

EXAMPLE—What is the diameter of a circle having an area of 314.16 square feet?

SOLUTION—$314.16 \div .7854 = 400$ and $\sqrt{400} = 20$ feet. Answer.

A table of American equivalents of metric measurements follows:

Table LXV—American Equivalents of Metric Measures

LINEAR

AMERICAN TO METRIC

	Inches to Millimeters	Feet to Meters	Yards to Meters	Miles to Kilometers
1 equals . .	25.4001	0.304801	0.914402	1.60935
2 equal . .	50.8001	0.609601	1.828804	3.21869
3 equal . .	76.2002	0.914402	2.743205	4.82804
4 equal . .	101.6002	1.219202	3.657607	6.43739
5 equal . .	127.0003	1.524003	4.572009	8.04674
6 equal . .	152.4003	1.828804	5.486411	9.65608
7 equal . .	177.8004	2.133604	6.400813	11.26543
8 equal . .	203.2004	2.438405	7.315215	12.87478
9 equal . .	228.6005	2.743205	8.229616	14.48412

METRIC TO AMERICAN

	Meters to Inches	Meters to Feet	Meters to Yards	Kilometers to Miles
1 equals . .	39.3700	3.28083	1.093611	0.62137
2 equal . .	78.7400	6.56167	2.187222	1.24274
3 equal . .	118.1100	9.84250	3.280833	1.86411
4 equal . .	157.4800	13.12333	4.374444	2.48548
5 equal . .	196.8500	16.40417	5.468056	3.10685
6 equal . .	236.2200	19.68500	6.561667	3.72822
7 equal . .	275.5900	22.96583	7.655278	4.34959
8 equal . .	314.9600	26.24667	8.748889	4.97096
9 equal . .	354.3300	29.52750	9.842500	5.59233

SQUARE

AMERICAN TO METRIC

	Square Inches to Square Centimeters	Square Feet to Square Decimeters	Square Yards to Square Meters	Acres to Hectares
1 equals . .	6.452	9.290	0.836	0.4047
2 equal . .	12.903	18.581	1.672	0.8094
3 equal . .	19.355	27.871	2.508	1.2141
4 equal . .	25.807	37.161	3.344	1.6187
5 equal . .	32.258	46.452	4.181	2.0234
6 equal . .	38.710	55.742	5.017	2.4281
7 equal . .	45.161	65.032	5.853	2.8328
8 equal . .	51.613	74.323	6.689	3.2375
9 equal . .	58.065	83.613	7.525	3.6422

METRIC TO AMERICAN

	Square Centimeters to Square Inches	Square Meters to Square Feet	Square Meters to Square Yards	Hectares to Acres
1 equals . .	0.1550	10.764	1.196	2.471
2 equal . .	0.3100	21.528	2.392	4.942
3 equal . .	0.4650	32.292	3.588	7.413
4 equal . .	0.6200	43.055	4.784	9.884
5 equal . .	0.7750	53.819	5.980	12.355
6 equal . .	0.9300	64.583	7.176	14.826
7 equal . .	1.0850	75.347	8.372	17.297
8 equal . .	1.2400	86.111	9.568	19.768
9 equal . .	1.3950	96.874	10.764	22.239

TABLE LXV—Continued

CUBIC

AMERICAN TO METRIC

	Cubic Inches to Cubic Centimeters	Cubic Feet to Cubic Meters	Cubic Yards to Cubic Meters	Bushels to Hectoliters
1 equals . .	16.387	0.02832	0.765	0.35242
2 equal . .	32.774	0.05663	1.529	0.70485
3 equal . .	49.161	0.08495	2.294	1.05727
4 equal . .	65.549	0.11327	3.058	1.40969
5 equal . .	81.936	0.14158	3.823	1.76211
6 equal . .	98.323	0.16990	4.587	2.11454
7 equal . .	114.710	0.19822	5.352	2.46696
8 equal . .	131.097	0.22654	6.116	2.81938
9 equal . .	147.484	0.25485	6.881	3.17181

METRIC TO AMERICAN

	Cubic Centimeters to Cubic Inches	Cubic Decimeters to Cubic Inches	Cubic Meters to Cubic Feet	Cubic Meters to Cubic Yards
1 equals . .	0.0610	61.023	35.314	1.308
2 equal . .	0.1220	123.047	70.629	2.616
3 equal . .	0.1831	183.070	105.943	3.924
4 equal . .	0.2441	244.093	141.258	5.232
5 equal . .	0.3051	305.117	176.572	6.540
6 equal . .	0.3661	366.140	211.887	7.848
7 equal . .	0.4272	427.163	247.201	9.156
8 equal . .	0.4882	488.187	282.516	10.464
9 equal . .	0.5492	549.210	317.830	11.771

WEIGHT

AMERICAN TO METRIC

	Grains to Milligrams	Avoirdupois Ounces to Grams	Avoirdupois Pounds to Kilograms	Troy Ounces to Grams
1 equals . .	64.7989	28.3495	0.45359	31.10348
2 equal . .	129.5978	56.6991	0.90719	62.20696
3 equal . .	194.3968	85.0486	1.36078	93.31044
4 equal . .	259.1957	113.3981	1.81437	124.41392
5 equal . .	323.9946	141.7476	2.26796	155.51740
6 equal . .	388.7935	170.0972	2.72156	186.62089
7 equal . .	453.5924	198.4467	3.17515	217.72437
8 equal . .	518.3914	226.7962	3.62874	248.82785
9 equal . .	583.1903	255.1457	4.08233	279.93133

METRIC TO AMERICAN

	Milligrams to Grains	Kilograms to Grains	Hectograms (100 Grams) to Ounces, Av.	Kilograms to Pounds, Av.
1 equals . .	0.01543	15,432.36	3.5274	2.20462
2 equal . .	0.03086	30,864.71	7.0548	4.40924
3 equal . .	0.04630	46,297.07	10.5822	6.61386
4 equal . .	0.06173	61,729.43	14.1096	8.81849
5 equal . .	0.07716	77,161.78	17.6370	11.02311
6 equal . .	0.09259	92,594.14	21.1644	13.22773
7 equal . .	0.10803	108,026.49	24.6918	15.43235
8 equal . .	0.12346	123,458.85	28.2192	17.63697
9 equal . .	0.13889	138,891.21	31.7466	19.84159

TABLE LXV—Continued

CAPACITY

AMERICAN TO METRIC

	Fluid Drams to Milliliters or Cubic Centimeters	Fluid Ounces to Milliliters	Quarts to Liters	Gallons to Liters
1 equals . .	3.70	29.57	0.94636	3.78544
2 equal . .	7.39	59.15	1.89272	7.57088
3 equal . .	11.09	88.72	2.83908	11.35632
4 equal . .	14.79	118.30	3.78544	15.14176
5 equal . .	18.48	147.87	4.73180	18.92720
6 equal . .	22.18	177.44	5.67816	22.71264
7 equal . .	25.88	207.02	6.62452	26.49808
8 equal . .	29.57	236.59	7.57088	30.28352
9 equal . .	33.28	266.16	8.51724	34.06896

METRIC TO AMERICAN

	Milliliters or Cubic Centiliters to Fluid Drams	Centiliters to Fluid Ounces	Liters to Quarts	Decaliters to Gallons	Hectoliters to Bushels
1 equals . .	0.27	0.338	1.0567	2.6417	2.8375
2 equal . .	0.54	0.676	2.1134	5.2834	5.6750
3 equal . .	0.81	1.014	3.1700	7.9251	8.5125
4 equal . .	1.08	1.352	4.2267	10.5668	11.3500
5 equal . .	1.35	1.691	5.2834	13.2085	14.1875
6 equal . .	1.62	2.029	6.3401	15.8502	17.0250
7 equal . .	1.89	2.368	7.3968	18.4919	19.8625
8 equal . .	2.16	2.706	8.4534	21.1336	22.7000
9 equal . .	2.43	3.043	9.5101	23.7753	25.5375

Tests of Non-Siphon Traps—The following is a brief synopsis of the results of tests of several well known non-siphon traps. The tests were conducted in Trenton, N. J., October 9, 1903, under the auspices of the board of health. The testing apparatus consisted of a rectangular tank of about 180 gallons capacity, located on the top floor of a house and about 40 feet from the ground. From the bottom of the tank a 1½-inch iron pipe extended a distance of 35 feet to an open sink. Four feet from the bottom of the tank a tee was screwed onto the pipe to provide a branch outlet for the traps that were to be tested. A Lunkenheimer quick-opening valve controlled the supply of water, permitting the full volume of the pipes to be turned on when required. The trap to be tested was screwed to the branch pipe, as shown in the illustration,

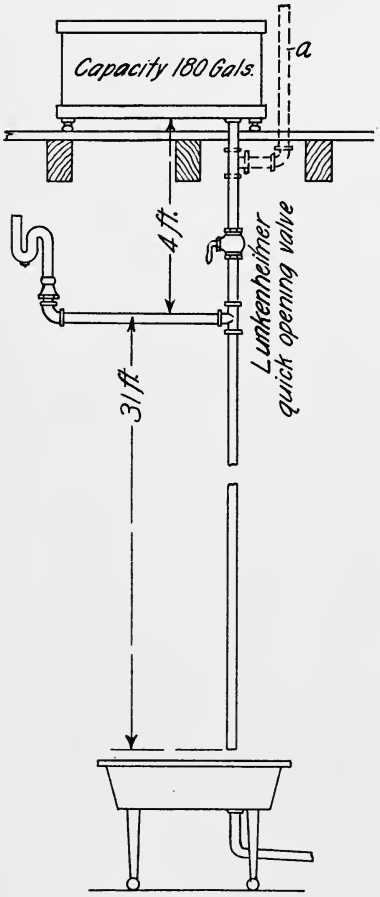

Fig. 166

Fig. 166. The tests to which these traps were subjected were unusually severe and cannot be taken as representative of the siphonic action they would be required to withstand in a well-designed drainage system. So severe was the siphonic action during the test that when a sheet of common note paper was placed over the elbow of the branch to which the traps were to be connected and the water turned on, a round disk was cut out of the paper as cleanly as though done with a knife.

It is a well understood principle of engineering practice that a suitable factor of safety should be provided in all structural materials and apparatus. This factor of safety seldom exceeds five times the strain to which the apparatus will be subjected. In the case of the trap tests conducted by the Trenton Board of Health, however, the siphonic action must have been at least twenty times as severe as it would have been had a vent been provided as shown by dotted lines at *a*. Such a vent would have made the testing apparatus conform more nearly to the conditions that obtain in a well designed drainage system. It is doubtful if in any rightly proportioned drainage system a prism of water the

full bore of the pipe would flow uninterruptedly for 25 seconds at one time, consequently any of the traps that withstood the Trenton test would be perfectly safe for any plumbing installation.

Test of the Sure Seal Trap—This trap had a seal of 4⅜ inches and the water it contained weighed 21½ ounces. The trap was subjected to a test for 5 seconds, after which it was examined and found to contain 11¼ ounces of water and possess a seal of 1⅞ inches, which is the average seal in siphon traps. The test was then applied for 25 seconds, after which the seal was found to be 1¾ inches, or only ⅛ less than in the 5-second test.

Test of the Cudell Trap—This trap contained 13½ ounces of water and a seal of 2¼ inches. After 5 seconds' test, 6 ounces of water remained in the trap, which had a seal of 1 inch. The trap was again filled and tested for 25 seconds without further reducing the water in the trap. The trap was again filled and a further test of 5 seconds applied without materially lowering the water in the trap. The Cudell trap used for this test was not the ball trap previously shown, but a newer design, a sectional view of which is shown in Fig. 167.

Test of Hajoca Trap—This trap contained 35½ ounces of water and a seal of 7½ inches. After 5 seconds' test it was found that a seal of 2¾ inches remained, the water weighing 7½ ounces.

Without refilling the trap, a further test of 5 seconds was made, which showed the siphonic action still continued. The test of this trap was then discontinued until the following day. The second trial of the Hajoca trap on the following day lasted 25 seconds. After the test there remained in the trap a seal of 1½ inches, the water of which weighed 6¾ ounces.

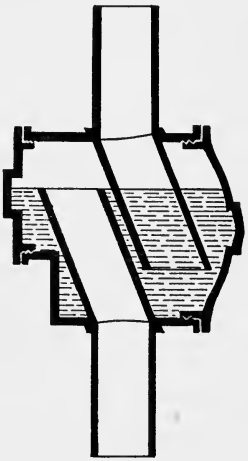

Fig. 167

Test of the Centrifugal Trap—This trap contained 29½ ounces of water and a seal of 3¾ inches. After a test of 5 seconds there remained in the trap about 10¼ ounces of water which maintained a seal of 1 inch. After a 25-seconds' test the water was slightly lowered, leaving a seal of less than 1 inch and a weight of less than 10 ounces.

WROUGHT-IRON AND STEEL PIPE

The relative merit of iron and steel has been a mooted question wherever steel has supplanted iron in any branch of engineering construction or mechanical installation. The two metals, however, have finally been assigned their proper values for the construction of bridges, skeletons for tall buildings, and plates and tubes for boilers, but owing to a widespread prejudice against steel pipe it never has been accorded its right place in plumbing and heating practice.

At the time that steel pipe was first put on the market, imperfections in its manufacture prevented a perfect weld being made; consequently, when a length of the pipe was subjected to a severe torsional stress during the process of threading or when being screwed into place, it often opened for several feet along the seam. As the welds could not be depended on to remain tight under the internal pressures and outside stresses to which they would be subjected in practice, steel pipe naturally fell into disfavor. Furthermore, the grade of metal used at the time steel pipe was first manufactured, lacked the soft quality characteristic of the present day grade of pipe steel, and in chilling it sometimes took on a temper in spots that was noticeable when cutting and threading the pipe with hand tools.

In addition to the unsuitability of the early grade of pipe steel for the manufacture of pipe, the time of its introduction was extremely inopportune. Steel pipe was first put on the market about twenty years ago, coincident with the introduction of electric railways. At that time imperfect return conductors, or the absence of return conductors, permitted the flow of numerous currents of electricity through the earth back to their respective dynamos; and in following the line of least resistance those vagrant currents often traveled for a certain distance along a line of gas or water pipe to a point where a suitable condition of moisture and soil permitted their return again

to the earth. At the numerous points where the electric current flowed off the pipes, electrolysis occurred which caused the pipes to pit and corrode, and as prior to that time pitting was unknown in wrought-iron pipe (the only known kind of welded pipe up to that time used) it seemed a logical deduction that all pipes that pitted were made of steel.

Time and investigation, however, have disproved that deduction. A material so extensively used and of such vast importance in mechanical installations could not long rest under the stigma of being unsuitable for its purpose without attracting the attention of impartial experimenters —seekers after truth—anxious to learn the relative value of the new material as compared with the old, that it might be assigned its right place in the list of pipe materials.

Numerous experiments have been made to determine the relative strength, workability and durability of wrought-iron and steel pipe. The result of these experiments, however, are scattered through various publications, some of which are not easy of access, and it is with the object of collecting the various data, digesting their substance, and giving in concise form the results of various experiments or of drawing from them logical conclusions that will help busy men to form a correct estimation of the value of soft steel for a pipe material, that this article is written.

It might be interesting here to note that the bulk of welded pipe now used in this country is made of steel. Of the 1,400,000 tons of pipe and tubes manufactured annually, about 1,000,000 tons, or over 70 per cent., is made of soft steel, and the remainder, 400,000 tons, about 30 per cent., is made of wrought-iron. It might be stated further, without fear of contradiction, that many contractors use steel pipe in their daily practice under the mistaken impression that it is wrought-iron pipe. The reason for this belief is that the name "wrought-iron" to a certain extent among dealers has been extended to include all kinds of welded pipe, and is used as a synonym for either wrought-iron or steel pipe, so that unless "strictly wrought-iron

pipe" is specified, the order might be filled indifferently with either wrought-iron or steel pipe. In view of this fact, the suggestion has been made that wrought-iron pipe and steel pipe each be designated by the term *wrought pipe*, a generic term, to indicate the kind or type of pipe without specifying the material of its composition; and as for most purposes neither material has an advantage over the other, the suggestion seems a good one.

To arrive at a true estimation of the value of a material, some standard of comparison must be assumed by which to measure the various qualities of the new material, and in proportion as the qualities rise above or fall below the assumed standard, the new material must be considered either better or worse. In the case of wrought-iron and steel pipe, wrought-iron having been first on the market, must be accepted as the standard with which steel pipe is to be compared, and comparisons made of the relative strength, workability and length of life of equal thickness of the two materials.

STRENGTH OF WROUGHT PIPE

Tensile Strength—Wrought pipes are made much thicker and stronger than is necessary to withstand the internal pressures to which under ordinary conditions they are subjected. This additional thickness and strength is necessary to withstand the various stresses incident to cutting and threading pipes and screwing them in place, and the severe strains that pipe lines must withstand when subjected to alternate contraction and expansion. Additional thickness is advantageous also in situations where active corrosion is to be expected.

The tensile strength of a pipe is the resistance it offers to the fiber of its metal being torn apart. Tensile strength of pipe varies with the material of which it is composed, and it would naturally follow that the material which possesses the greatest tensile strength, all other qualities being equal, would make the best pipe material. The tensile strength of soft steel, such as is used in the manufacture of pipe, is about 61,000 pounds per square inch, and

the tensile strength of wrought-iron is about 34,000 pounds per square inch, taken transversely in each case. It follows, therefore, that for pipes of equal size and thickness, steel pipe will withstand a working pressure of almost double that of wrought-iron pipe, and so far as the strength of the two metals is concerned, it is the better pipe material.

It might be inferred from the fact that steel pipe possesses almost double the tensile strength of wrought-iron pipe, that the walls of steel pipe could be made proportionately thinner, thus saving considerable in the material and weight of steel pipe. Other considerations, however, require that there be no appreciable difference between the thickness of walls of pipe made from the two metals; for instance, as steel pipe is about twice as strong as wrought-iron pipe, the loss from corrosion or other cause of a certain thickness from the walls of a steel pipe would weaken it almost twice as much as would the loss of an equal thickness from the walls of a wrought-iron pipe.

Strength of Seam — The tensile strength of a pipe metal cannot be taken as the actual strength of the pipe, for just as a chain is only as strong as its weakest link, so a pipe is only as strong as its weakest part—the seam. The strength of a welded seam varies with the quality of metal and the skill of the workman who makes the weld. In the case of wrought-iron pipe the strength of the seam varies from 49 to 84 per cent., and will average about 70 per cent. of the tensile strength of the metal. On the other hand the strength of the welded seams of steel pipe varies from about 50 to about 93 per cent., and will average about 72 per cent. of the tensile strength of the metal.

So far, then, as the ratio between the strength of seam and tensile strength of the metal is concerned, there is but slight difference between that of wrought-iron and steel; it should be remembered, however, that the tensile strength of steel is almost double that of wrought-iron, consequently the actual strength of a weld in steel pipe is about double that in a wrought-iron pipe. It may safely be assumed, therefore, that for all purposes a certain

size and weight of steel pipe possesses about twice the strength of an equal size and weight of wrought-iron pipe, and will sustain almost double the working pressure, besides withstanding almost double the torsional stresses without opening at the seam.

Torsional Strength of Pipe — As would be expected from the greater tensile strength of steel and from the greater strength of a steel weld, steel pipe will withstand a much greater degree of torsional stress, without failing at the weld or being twisted off, than will equal weights and sizes of wrought-iron pipe. The greater torsional strength of steel pipe can be seen by comparing Tables LXVI and LXVII, which show the results of torsional tests of iron and steel pipe made by the National Tube Works of Pittsburgh, Pa.

In the following tables of tests each of the fifteen ½-inch steel pipes was subjected to a torsional strain that twisted it an average of fifteen complete turns. Under this stress only six pipes broke, no welds failed at the seams, and nine of the pieces underwent the test without failure. On the other hand, of the fifteen wrought-iron pipes subjected to a torsional strain that twisted them each an average of five and three-quarter turns, every one of the fifteen failed, five by breaking off and the remaining ten failed in the weld.

In the larger sizes of pipe, the ratio 1 to 2.6 between the number of twists of wrought-iron and steel would not hold true. For instance, in the case of ¾-inch pipe the ratio is as 1 to 2.3 and in 1-inch pipe the ratio is 1 to 1.66 and decreases proportionately as the size of the pipe increases.

On account of the greater pliability of steel pipe which permits of its being bent and twisted without opening at the seam or in other ways failing, it makes a better material for installations where numerous pipe bends are to be made. It might be well to note that in the bending of wrought pipe there is less liability of its failing at the seam if the pipe is held so the weld will be at the side and not at the top or bottom.

TABLE LXVI—TORSIONAL TESTS OF STEEL PIPE. ½-INCH STEEL

(National Tube Company)

Number of Pieces	Weight Per Piece Pounds	Length Feet	Weight Per Foot Pounds	Variation from Card Weight Per Cent.	Maximum Pull on 3-Foot Lever Pounds	Turns	Remarks
1	4.81	6.00	.801	—4.3	105	12¾	Did not break
2	4.81	6.00	.801	—4.3	110	15	Did not break
3	5.00	6.00	.833	— .5	115	16	Did not break
4	4.75	6.00	.791	—5.5	105	15½	Broke off
5	5.06	6.00	.843	+ .7	110	15½	Did not break
6	4.88	6.00	.813	—2.9	115	16½	Did not break
7	4.75	6.00	.791	—5.5	110	14¾	Did not break
8	4.88	6.00	.813	—2.9	110	13½	Did not break
9	5.00	6.00	.833	— .5	110	15	Broke off
10	4.75	6.00	.791	—5.5	100	14¾	Did not break
11	4.88	6.00	.813	—2.9	115	18½	Broke off
12	5.06	6.00	.843	+ .7	90	14	Broke off
13	4.81	6.00	.801	—4.3	110	13¾	Did not break
14	5.00	6.00	.833	— .5	120	20½	Broke off
15	5.06	6.00	.843	+ .7	105	9	Broke off
Avg.			.816	—2.5	109	15	

TABLE LXVII—TORSIONAL TESTS OF WROUGHT-IRON PIPE

½-INCH PIPE

(National Tube Company)

31	4.75	6.00	.791	—5.5	33	¼	Failed in weld
32	4.88	6.01	.810	—3.2	90	9½	Twisted off
33	4.69	6.00	.781	—6.6	67	2	Failed in weld
34	4.81	6.00	.801	—4.3	113	6	Failed in weld
35	5.12	6.01	.852	+1.8	105	10	Failed in weld
36	4.81	6.01	.800	—4.4	73	3	Failed in weld
37	4.50	6.02	.747	—10.8	113	9	Broke off
38	5.00	6.00	.833	— .5	100	9¼	Broke off
39	4.63	6.00	.771	—7.9	90	11	Broke off
40	4.88	6.00	.813	—2.9	95	7½	Broke off
41	4.63	6.00	.771	—7.9	73	2	Failed in weld
42	4.69	6.01	.780	—6.7	55	1¼	Failed in weld
43	4.69	6.00	.781	—6.6	20	¾	Failed in weld
44	4.75	6.01	.790	—5.6	100	13	Failed in weld
45	4.63	6.01	.770	—8.0	87	2	Failed in weld
Avg.			.792	—5.2	81	5¾	

THREADING WROUGHT PIPE

As tensile strength of a metal is the resistance it offers to its fibers being torn apart, it follows as a natural conse-

quence that steel pipe, which is the stronger and tougher of the two, is harder to thread than is wrought-iron pipe, which has from 2 to 3 per cent. of cinder intermixed, which so weakens the structure that no particular difficulty is experienced in scraping out a thread with the form of die commonly used in practice.

The force required to thread steel pipe with the dies commonly used, is 20 to 40 per cent. greater than the force required to thread equal sizes of wrought-iron pipe. For instance, to cut a thread with an ordinary die on 1¼-inch wrought-iron pipe requires a pull of from 83 to 87 pounds on a stock arm 21 inches long, and to cut a thread on 1¼-inch steel pipe with a similar die requires a pull of from 100 to 111 pounds on a stock arm 21 inches long.

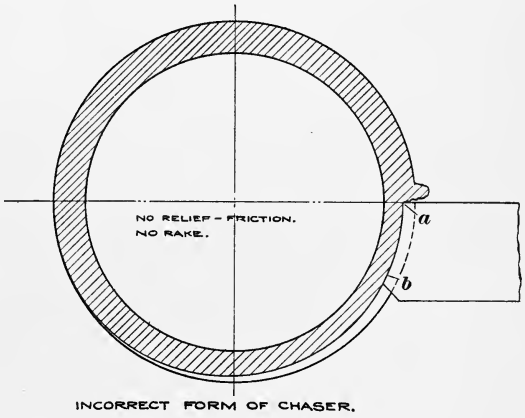

INCORRECT FORM OF CHASER.

Fig. 168

Under ordinary conditions then, as they obtain in practice, it can be assumed that to thread steel pipe requires an expenditure of 30 per cent. more energy than is required to cut and thread wrought-iron pipe. This waste of energy, however, can be reduced to an amount too small to be considered by using dies of proper design.

Ordinary pipe-threading dies used with hand stocks are made with cutting edge radial as shown in Fig. 168. In these dies the cutting edge, *a*, is made without rake and the chaser, *b*, without relief. Where such a shaped die is used, the fiber of the metal is torn more than it is cut and the friction of the chaser on the pipes causes a useless waste of energy. On the other hand, dies made with an angle of

front rake, as shown at *a* in Fig. 169, present a sharp edge that cuts instead of tears the metal from the pipe. In addition to possessing sufficient rake, as this angle is called, a die should possess sufficient clearance so that chips of iron

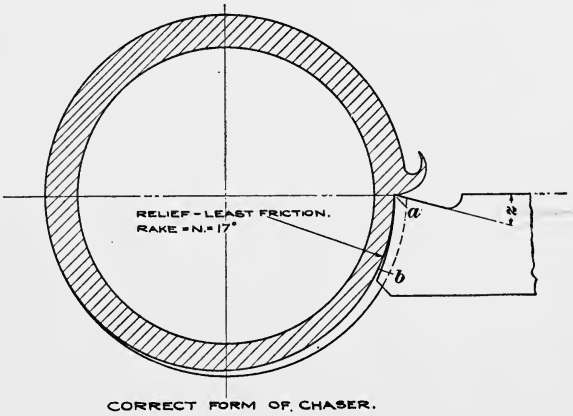

Fig. 169

or steel from the pipe cannot interfere and clog the chaser, thus causing it to tear the thread. The chaser should be relieved as shown at *b*, so that the die will bear on the pipe only at the cutting edge.

The best angle of rake for a die used for threading wrought-iron pipe is 12 degrees; for threading steel pipe, 17 degrees, and for threading either wrought-iron or steel pipe, 15 degrees. With dies of 15 degrees rake, 1¼-inch wrought-iron pipe can be cut by exerting a pull of from 58 to 62 pounds on a stock handle 21 inches long, while with common dies a pull of 83 to 97 pounds would be required.

The saving of energy when threading steel pipe with dies of approved rake and clearance is even greater than the saving of energy when threading wrought-iron pipe with dies of proper rake and clearance. For instance, 1¼-inch steel pipe can be threaded with properly shaped dies by exerting a pull of from 60 to 65 pounds on a 21-inch die stock, while a pull of from 100 to 111 pounds would be

required to thread the same pipe with an ordinary die. It will be observed that a pull of only 2 pounds more is required to thread 1¼-inch steel pipe than is required to thread an equal size of wrought-iron pipe with approved dies, and that 1¼-inch steel pipe can be threaded with approved dies with an expenditure of 23 pounds less energy than is required to thread wrought-iron pipe with ordinary dies.

Besides making the work easy, dies made on these lines last proportionately longer and make a smoother thread and consequently a tighter joint. Experience tends to show that the threading difficulty had much to do with preference formerly shown for wrought-iron pipe.

Relative Corrosion of Iron and Steel Pipe—The greater amount of energy required to thread steel pipe with common dies was perhaps not the chief factor operating to prevent the more extensive use of steel pipe, so much as was the widespread belief that pipe steel possessed a great amount of carbon in its composition, and, therefore, was more easily corroded under ordinary conditions than was wrought-iron. As a matter of fact, however, there is but little difference between the composition of iron and of *pipe* steel. The steel used in the manufacture of pipe is really a refined iron made by the Bessemer process. It is similar to wrought-iron in that the carbon is reduced to a few hundredths of one per cent., but differs from wrought-iron in that it is free from cinder, scale, and other impurities. Pipe steel, practically speaking, is a superior grade of wrought-iron, the cinder of which has been removed from the molten metal in the process of refining the pig iron.

Numerous experiments have been made to determine the relative corrodibility of wrought-iron and steel. The result of various investigations up to 1892 has been collected and discussed in the "Metallurgy of Steel," by H. M. Howe, Professor of Metallurgy at Columbia University, formerly of Harvard, from which book most of the following data were obtained. It might be remarked in

passing, that great improvement has been made in the manufacture of pipe steel since 1892, and that tests made within recent years show far better results that those cited here.

The result of Professor Howe's study of the relative corrosion of iron and steel is summed up in his opinion that "there is probably no important difference in the rate at which these two classes of iron corrode under ordinary conditions." There are conditions, however, under which wrought-iron is more resistant than steel, others under which steel is more resistant than wrought-iron, while for most uses there is no appreciable difference in the corrodibility of the two metals. For instance, wrought-iron corrodes more rapidly than steel when immersed in foul river water, also exposed to acidulated waters. On the other hand, steel corrodes faster than wrought-iron when immersed in hot sea water or when exposed to the weather, and the corrosion of wrought-iron and steel is equal when immersed in cold water other than pure sea water; in pure river water, in sewage-bearing sea waters and in bilge water.

It might further be stated that while steel corrodes faster than wrought-iron when exposed to hot sea water, the loss is so infinitesimal that it in no way interferes with the use of steel for marine work, and that all plates and tubes used in marine boilers and in surface condensers are made of steel. Indeed, the use of steel for marine work is not only permitted but preferred by naval engineers, and is approved by the Lloyds Register, whose chief engineer-surveyor, in a private communication to Professor Howe, stated that "Experience has proved that steel does resist corrosion equally as well as iron, and is used almost exclusively in the manufacture of marine boilers. Ninety-nine out of every hundred boilers constructed under the inspection of this society's surveyors are made of steel. In fact, the use of iron for marine boiler-making is a thing of the past."

In Table LXVIII are shown the results of experiments

of two different observers to determine the loss of wrought-iron and steel from corrosion, in pounds per square foot of surface per annum. From the results tabulated it can be seen that the difference in corrodibility between the two metals is so slight that it might be due to peculiarities of structure in the samples used, and would indicate that the difference in corrodibility between the two metals is so slight that for practical purposes it can be assumed that the corrosion is equal.

Table LXIX shows the relative corrosion of wrought-iron and steel in small scale tests under different conditions of exposure.

The results of experiments on the corrodibility of wrought-iron and steel all point to the fact that when exposed to the weather steel will corrode more rapidly than will wrought-iron. This fact would probably assign to steel pipe a lower value than wrought-iron pipe for durability, were it not that coating or covering pipe protects it from the weather, and most exposed pipe is either painted, covered or galvanized. In this connection Mallet's observations, in Table LXVIII, on the corrodibility of galvanized wrought-iron pipe are interesting as showing the protection offered by a coating of zinc. The fact that galvanizing protects steel pipe in the same manner as it does wrought-iron would seem to indicate that economy would be effected in the life of wrought pipe by having it galvanized before use. This would be particularly desirable or advantageous for steel pipe, which, owing to the less cost of its manufacture, could probably be put on the market galvanized at the cost of plain wrought-iron pipe.

Electrolysis of Pipes—No data are available showing the relative life of wrought-iron and steel when exposed to electrolysis. However, it may be stated that the life of pipe when exposed to the pitting caused by electricity is so extremely short that the difference between the life of various materials would be too slight to be considered.

The criticism of the enduring qualities of steel, while often unfair and founded more on prejudice than personal

TABLE LXVIII—LOSS OF IRON AND STEEL BY CORROSION IN POUNDS PER SQUARE FOOT OF SURFACE PER ANNUM

Observer	Metal	Exposed to Weather	Immersed in Cold Pure Sea Water	Immersed in Foul Sea Water	Immersed in Fresh Water		Remarks
					Pure River	Foul River	
Mallet....	Wrought-iron, plain	.138	.121	.215	.013	.158	Average of 17 pieces
	Wrought-iron, galvanized	....	.039	.088	.005	.041	Average of 17 pieces
Thwaite's	Steel.....	.117	.107	.214	.013	.125	Average of 7 pieces
Average..	Wrought-iron	.138	.121	.215			
	Steel.....	.137	.107	.214			

TABLE LXIX—RELATIVE CORROSION OF WROUGHT-IRON AND STEEL

Conditions of Exposure	Relative Corrodibility	Quality of Evidence
A In pure, cold sea water	Corrode nearly equal	Abundant and tolerably harmonious
1 Simple immersion..	Possibly little difference	Contradictory
2 Steel and bright wrought-iron in galvanic contact		
3 In galvanic contact with..... Scale bearing iron....	Nearly identical.....	Scanty, tolerably harmonious
Copper	Nearly identical.....	Scanty, tolerably harmonious
B Hot sea water.....	Steel much more corrodible, perhaps 50 per cent	Very harmonious, tolerably abundant
C Exposed to weather...	Soft steel corrodes decidedly faster than wrought-iron..... [Not so with modern steel, which is more homogeneous and resistant—F. U. S.]	Harmonious, scanty
D In foul sea water.....	Nearly identical.....	Harmonious, moderately abundant
E In pure, fresh water...	Nearly identical.....	Rather scanty
F In foul, fresh water....	Steel rather less corrodible.....	Rather scanty
G In acidulated water ...	Steel decidedly the less corrodible.....	Scanty

Metallurgy of Steel.—Howe.

knowledge, has had the good effect of causing many to turn their attentions to the improvement of steel in this important quality.

It is well known that an addition of twenty-six per cent. nickel increases the life of steel about three times, but this alloy cannot easily be made into pipe. The first

process which has been shown to be effective and commercially practicable in prolonging the life of steel is one adopted over a year ago by the National Tube Company.

Details of the treatment have not yet been made public, but the process is described as a mechanical working or kneading of the metal with the object of removing imperfections, densifying its texture, and lessening the tendency to pit.

According to Professor Howe, pipe made of this grade of steel shows unusually even corrosion, and when immersed in hot salt water loses on the average initial corrosion fifteen per cent. less than wrought-iron.

While the difference in corrosion is not great, it is on the right side, under conditions which all seem to agree are relatively unfavorable to steel as usually made.

Other improvements will doubtless follow, both in the quality of pipe steel and in protective coatings for pipe, so that in the near future there will be available a pipe material that is strong, durable and easy to work.

Index

A

PAGE

Absolute Strength of Material..... 113
Absorption and Radiation of Heat. 168
Absorption of Gases by Water..... 83
Accessories..... 102
Air Chambers..... 109
Air Chambers, Contrivance for Recharging..... 140
Air Chambers, Formula for Size of 111
Air Chambers on Pumps..... 140
Air Chambers, Rule for Size of..... 110
Air Inlets, Fresh..... 25
American Equivalents of Metric Measures..... 249
Angle Valves..... 122
Apparatus, Water Softening..... 164
Appendix..... 245
Appliances, Safety..... 208
Area and Yard Catch Basins..... 29
Area and Yard Drains..... 29
Area and Yard Drains, Trapping.. 30
Areas and Diameters of Pipes..... 29
Aspiration, Siphonage of Traps by 43
Automatic Water Heaters..... 198

B

Back-vent from Trap, Distance of 45
Back-venting, Example of..... 46
Back-venting Traps..... 44
Basins, Area and Yard Catch..... 29
Baths, Rain and Shower..... 243
Baths, Seat..... 243
Bath Tubs..... 241
Bends, Formula for Loss of Head in 93
Bends, Loss of Head in..... 91
Bidets..... 233
Blow-off Tanks, Dimensions and Capacities of..... 54
Blow-off Tanks for Boilers..... 53
Blow-off Tanks, Size of..... 54
Blow-off Tank Outlets, Size of..... 55
Blow-off Tanks, Type of..... 54
Boiler and Tank Connections..... 205
Boiler at Lower Level, Heater Connection to..... 211
Boilers and Tanks, Proportioning Size of..... 204
Boilers and Tanks, Supports for... 203
Boilers, Blow-off Tanks for..... 53
Boilers, Capacities of Cold-weld... 202
Boilers, Capacities of Copper..... 200
Boilers, Capacities of Galvanized Range..... 201
Boilers, Cold-weld Range..... 202
Boilers, Connections to Horizontal 212
Boilers, Copper Range..... 199
Boilers, Double Heater Connections to..... 209
Boilers, Galvanized Range..... 200
Boilers, Mud Drum for..... 202
Boilers, Range..... 199
Boilers, Safety Copper..... 199
Boiling Point of Water..... 173
Branch, Distributing..... 136
Branch, Fixture..... 136
Branches and Stacks..... 30
Brass Pipes..... 118
Brass Tubing, Seamless..... 120
British Thermal Unit..... 168
Bulk of Water, Formula for Contraction in..... 173

PAGE

Bulk of Water, Formula for Increase in..... 172
Bursting Pressure in Lead Pipe, Formula for..... 114
Bursting Stress of Material..... 113

C

Calked Joints, Lead..... 8
Capacities and Dimensions of Blow-off Tanks..... 54
Capacities of Centrifugal Pumps.. 59
Capacities of Cold-weld Boilers.... 202
Capacities of Galvanized Boilers... 201
Capacity and Dimensions of Gravity Filters..... 161
Capacity and Dimensions of Pressure Filters..... 162
Capacity and Size of Quimby Pumps..... 145
Capacity and Weight of Different Standard Gallons of Water..... 71
Capacity of Copper Boilers..... 200
Capacity of Drains..... 21
Capacity of Drains, Rule for..... 23
Capacity of Noiseless Water Heaters 186
Capacity of Steam Pumps..... 142
Capacity of Steam Pumps, Formula for..... 142
Capacity of Suction Tanks..... 147
Capacity of Water Backs and Coils 176
Capacity of Water Heaters..... 178
Capacity of Water Heaters, Formula for..... 179
Capacity of Water Heaters, Rule for..... 179
Cast-iron Pipe, Cutting..... 9
Cast-iron Pipe, Expansion of..... 216
Cast-iron Pipe, Weights of..... 7
Catch Basins, Yard and Area..... 29
Centrifugal Pumps, Capacities of.. 59
Centrifugal Pump Sewage Ejectors 58
Centrifugal Trap..... 49
Centrifugal Trap, Test of the..... 254
Chambers, Air..... 109
Chambers, Contrivance for Recharging Air..... 140
Chambers, Formula for Size of Air 111
Chambers on Pumps, Air..... 140
Chambers, Rule for Size of Air..... 110
Check Valves, Lift..... 122
Check Valves, Swing..... 123
Circulation of Water..... 173
Circulation Pipes..... 215
Cities, Per Capita Consumption of Water in..... 24
Classification of Meters..... 100
Classification of Plumbing Fixtures 221
Classification of Water..... 72
Clean-out Ferrules..... 12
Clean-sweep Trap..... 50
Closet Compartments, Ventilation of..... 232
Closets, Hopper..... 222
Closets, Requirements of Sanitary. 222
Closets, Water..... 222
Closets, Siphon-jet..... 225
Closets, Soil Pipe Connections to.. 227
Coagulant Pump..... 157
Coagulation of Water..... 156
Cocks and Valves..... 120

	PAGE
Cocks, Compression	125
Cocks, Ground Key	124
Coefficient *f*, Values of	94
Coefficient *m*, Values of	97
Coefficient *n*, Values of	92
Coefficients of Pressure	111
Coil Regulators, Steam	214
Coils and Water Backs, Capacity of	176
Coils, Formula for Size of Steam	183
Coils, Heating Water with Steam	182
Coils, Rule for Size of Steam	183
Coils, Water-heating	176
Cold Water Supply	71
Cold-weld Boilers, Capacities of	202
Cold-weld Range Boilers	202
Combinations, Low-down	231
Commercial Types of Traps	48
Commingler	187
Compartments, Ventilation of Closet	232
Complete Water Supply Equipments	149
Compressed Air Sewage Ejectors	60
Compressed Air Test	69
Compression Cocks	125
Conditions Governing Use of Grease Traps	51
Conduction of Heat	167
Connecting Several Fixtures to One Trap	50
Connections, Boiler and Tank	205
Connections, Service	128
Connections to Boilers, Double Heater	209
Connections to Horizontal Boilers	212
Connections to House Drains	12
Connections to Traps, Vent	44
Connection, Siamese Twin	153
Connection to Boiler at Lower Level, Heater	211
Connection to House Drain, Fresh Air Inlet	26
Connection to Street Sewer	9
Connections to Roof, Leader	28
Connection to Closets, Soil Pipe	227
Contact, Heating Water by Steam in	184
Contracted Vein, The	89
Contraction in Bulk of Water, Formula for	173
Contrivance for Recharging Air Chambers	140
Controllers, Filtration	159
Convection of Heat	167
Copper Boilers, Capacity of	200
Copper Boilers, Safety	199
Copper in Samples of Ground Water	82
Copper in Samples of Surface Water	82
Copper Pantry Sinks	238
Copper Range Boilers	199
Corrosion of Iron and Steel Pipe	263
Covering for Tanks	219
Covering, Lime and Magnesia in Pipe	218
Cudell Trap	48
Cudell Trap, Test of the	253
Cutting Cast-iron Pipe	9
Decimal Equivalents of an Inch	246
Decimal Equivalents of Fractions of an Inch	247
Decimal Fractions of a Foot	245
Decimals of a Square Foot	247
Decimals of a Square Foot, Square Inches in	247
Definition of House Drain	10
Definition of House Sewer	3
Definition of Soil Pipe	30
Definition of Soil Stack	30
Definition of Vent Pipe	31
Definition of Vent Stack	30
Definition of Waste Pipe	30
Definition of Waste Stack	30
Density and Volume of Water at Different Temperatures	171
Density of Water, Maximum	170
Details, Water Supply	128
Diameters and Areas of Pipes	29
Diameters, Formula for	98
Dimensions and Capacities of Blow-off Tanks	54
Dimensions and Capacity of Gravity Filters	161
Dimensions and Capacity of Pressure Filters	162
Dimensions and Weights of Wrought Pipe	119
Direct-acting Steam Pumps, Single	141
Discharge, Mechanical Systems of Sewage	57
Disk Meter, Hersey	101
Disposal of Sub-soil Water	63
Distance of Back-vent from Trap	45
Distributing Branch	136
Distributing Main	136
Distributing Manifolds	133
Double Heater Connections to Boilers	209
Draft Regulators	213
Drainage, Sub-soil	63
Drainage, Sub-soil, where Required	63
Drainage System, Example of One-pipe	34
Drainage System, The	3
Drainage Systems, Examples of	31
Drainage Systems, Single Pipe	31
Drainage Systems, Testing	64
Drainage Systems, Testing in Sections	68
Drainage Systems, Two-pipe	31
Drain, Fresh Air Inlet to House	26
Drain, House	10
Drain, Materials of House	11
Drain Trap, Main	15
Drains, Capacity of	21
Drains, Connections to House	12
Drains, Floor	16
Drains, Formula for Grade of	17
Drains, Formula for Size of	20
Drains, Rule for Capacity of	23
Drains, Rule to find Proper Fall for	17
Drains, Size of House	18
Drains, Supports for House	14
Drains, Table of Fall for	17
Drains, Trapping Yard and Area	30
Drains, Velocity of Flow in	17
Drains, Yard and Area	29
Drinking Fountains	243
Drinking Water, Lead found in	78
Drum for Boilers, Mud	202
Economy of Soft Water	161
Effect of Back Pressure on Trap	46
Effect of Galvanized Pipe on Water	79
Effect of Metals on Health	82

D

E

	PAGE
Effect of Water on Lead	77
Effect of Waters on Metals	76
Efficiency of Gravity Filters	160
Efficiency of Filters	158
Elastic Limit of Material	113
Electrolysis of Pipes	265
Emptying-pipes and Valves	136
Engines, Hot-air Pumping	146
Equation of Pipes	130
Equipments, Complete Water Supply	149
Equivalents of an Inch, Decimal	246
Equivalents of Fractions of an Inch, Decimal	247
Example of Back-venting	46
Example of One-pipe Drainage System	34
Examples of Drainage Systems	31
Examples of Trap Installation	50
Expansion of Cast-iron Pipe	216
Expansion of Pipes	215
Expansion of Pipes, Formula for	216
Expansion of Soil and Waste Stacks	35
Expansion of Water	170
Expansion Pipe	209
Evaporation from Non-siphon Traps	47
Evaporation of Water from Traps	45

F

Fall for Drains, Rule to Find	17
Fall for Drains, Table of	17
Faucets, Self-closing	126
Faucets, Fuller Pattern	125
Ferrules, Clean-out	12
Filter, Gravity Type	156
Filters, Capacity and Dimensions of Gravity	161
Filters, Capacity and Dimensions of Pressure	162
Filters, Efficiency of Gravity	158
Filters, Pressure	160
Filtration Controllers	159
Filtration of Water	155
Filtration, Rapid Sand	155
Filtration, Theory of	155
Final Tests	70
Fire Hose	153
Fire Lines	152
Fire Lines, Installation of	152
Fire Stream, Range of	152
Fires, Temperature of	170
Fish Traps	102
Fittings, Iron-pipe	120
Fixture Branch	136
Fixture Traps	41
Fixture Traps, Size of	48
Fixtures, Classification of Plumbing	221
Fixtures, Connecting Several, to One Trap	50
Fixtures, Laving	240
Fixtures, Plumbing	221
Fixtures, Requirements of Sanitary	221
Fixtures, Scullery	237
Fixtures, Soil	222
Flashings, Roof	37
Floor Drains	16
Flow, Formulas for Velocity of	97
Flow in Drains, Velocity of	17
Flow in Pipes, Velocity of	96
Flow of Water through Pipes	89
Flow of Water through Pipes	96

	PAGE
Flues, Rule for Size of Smoke	181
Flues, Smoke	180
Flush Pipes	228
Flush Tanks	228
Flush Tanks, Urinal	235
Flush Valves	228
Flush Valves	230
Flush Valve Systems, Rule for Proportioning Piping for	231
Foot, Decimals of a Square	247
Force Pumps	138
Formula for Bursting Pressure of Lead Pipe	114
Formula for Capacity of Steam Pumps	142
Formula for Capacity of Water Heaters	179
Formula for Contraction in Bulk of Water	173
Formula for Diameter	98
Formula for Expansion of Pipes	216
Formula for Grade of Drains	17
Formula for Head	98
Formula for Increase in Bulk of Water	172
Formula for Loss of Head Due to Entry	90
Formula for Loss of Head Due to Friction	94
Formula for Loss of Head in Bends	93
Formula for Quantity	99
Formula for Safe Thickness of Lead Pipes	115
Formula for Size of Air Chambers	111
Formula for Size of Drains	20
Formula for Size of Steam Coil	183
Formula for Steam Required to Heat Water	190
Formulas for Velocity of Flow	97
Fountains, Drinking	243
Fractions of a Foot, Decimal	245
Fractions of an Inch, Decimal Equivalents of	247
Fresh Air Inlet Connection to House Drain	26
Fresh Air Inlet, Location of	26
Fresh Air Inlets	25
Fresh Air Inlets, Size of	27
Friction, Formula for Loss of Head Due to	94
Friction in Pipes	89
Friction in Pipes, Laws for	93
Fuller Pattern Faucets	125

G

Gallons of Water, Capacity and Weight of Different Standard	71
Galvanized Pipe, Effect of, on Water	79
Galvanized Range Boilers	200
Galvanized Range Boilers, Capacities of	201
Garbage Burning Water-heater	180
Gases, Absorption of, by Water	83
Gas, Heating Water by	195
Gas Water-heater	197
Gate Valves	120
Gem Meter	101
Globe Valves	121
Grade of Drains, Formula for	17
Gradient, Hydrostatic	85
Gradient, The Hydraulic	84
Gravity Filters, Capacity and Dimensions of	161

PAGE

Gravity Filters, Efficiency of..... 160
Gravity Type Filter..... 156
Grease Traps..... 51
Grease Traps, Conditions Governing Use of..... 51
Grease Traps, Location for..... 52
Grease Traps, Size of..... 52
Grease Traps, Types of..... 53
Ground Key Cocks..... 124
Ground Water, Copper in Samples of..... 82
Ground Water, Lead in Samples of 79
Ground Water, Zinc in Samples of 81

H

Hajoca Trap, Test of the..... 253
Hammer, Intensity of Water..... 106
Hammer, Water..... 103
Hardness of Water..... 74
Hard Water..... 72
Hard Water, Permanently..... 72
Hard Water, Temporarily..... 72
Head and Pressure of Water..... 86
Head, Formula for..... 98
Head, Formula for Loss of, Due to Friction..... 94
Head, Formula for Loss of, in Bends 93
Head, Hydrostatic..... 85
Head, Loss of..... 89
Head, Loss of, Due to Entry..... 89
Head, Loss of, in Bends..... 91
Head, Loss of, in Pounds..... 95
Head, Loss of, in Straight Pipes.... 93
Head, Pressure..... 85
Heads and Pressures of Water..... 88
Health, Effect of Metals on..... 82
Heat, Absorption and Radiation of 168
Heat, Conduction of..... 167
Heat, Convection of..... 167
Heat, Measurement of..... 168
Heat, Radiation of..... 167
Heat, Transfer of..... 167
Heat, Transmission of..... 169
Heat Transmitted by Steam to Water..... 188
Heat, Unit of..... 168
Heat Water, Steam Required to.... 189
Heater Connection to Boiler at Lower Level..... 211
Heater Connection to Boiler, Double 209
Heaters, Automatic Water..... 198
Heaters, Capacity of Noiseless Water..... 186
Heaters, Capacity of Water..... 178
Heaters, Formula for Capacity of Water..... 179
Heaters, Garbage Burning Water.. 180
Heaters, Incrustation of Water.... 181
Heaters, Instantaneous Water..... 195
Heaters, Noiseless Water..... 185
Heaters, Rule for Capacity of Water..... 179
Heaters, Water..... 177
Heating Coils, Water..... 176
Heating Water by Gas..... 195
Heating Water by Steam in Contact 184
Heating Water with Steam Coils.. 182
Hersey Disk Meter..... 101
Hopper Closets..... 222
Horizontal Boilers, Connections to. 212
Hose, Fire..... 153
Hose Reels..... 154
Hospital Lavatory..... 241
Hospital Slop Sinks..... 237

PAGE

Hot-air Pumping Engines..... 146
Hot Water, Properties of..... 170
Hot Water Supply..... 167
Hot Water Tanks..... 203
Hot Water, Tanks for Storing..... 199
House Drain..... 10
House Drain, Fresh Air Inlet to.... 26
House Drain, Materials of..... 11
House Drains, Connections to..... 12
House Drains, Size of..... 18
House Drains, Supports for..... 14
House Pumps..... 143
House Sewer, Iron Pipe..... 7
House Sewer, The..... 3
House Sewers, Tile..... 3
House Tanks..... 147
House Tanks, Size of..... 148
Hydraulic Gradient, The..... 84
Hydraulic Pressure, Laws of..... 84
Hydraulics..... 89
Hydrodynamics..... 84
Hydrostatic Gradient..... 85
Hydrostatic Head..... 85
Hydrostatics..... 84

I

Inch, Decimal Equivalents of an... 246
Inch, Decimal Equivalents of Fractions of an..... 247
Increase in Bulk of Water, Formula for..... 172
Incrustation of Water Heaters..... 181
Inlet, Location of Fresh Air..... 26
Inlets, Fresh Air..... 25
Inlets, Size of Fresh Air..... 27
Inside Rain Leaders..... 27
Installation, Examples of Trap.... 50
Installation of Fire Lines..... 152
Instantaneous Water Heaters..... 195
Intensity of Rainfalls..... 19
Intensity of Water Hammer..... 106
Iron and Steel Pipe, Corrosion of... 263
Iron Pipe Fittings..... 120
Iron Pipe House Sewer..... 7

J

Joints, Lead Calked..... 8
Joints, Rust..... 8
Joints, Tile Pipe..... 5

K

Kitchen Sinks..... 237
Kitchen Sinks and Laundry Trays, Trapping..... 50

L

Latrine Troughs..... 231
Laundry Trays..... 239
Laundry Trays and Kitchen Sinks, Trapping..... 50
Lavatories..... 240
Lavatories, Sanitary Requirements of..... 240
Lavatory, Hospital..... 241
Laving Fixtures..... 240
Law of Pressure, Pascil's..... 87
Laws for Friction in Pipes..... 93
Laws of Hydraulic Pressure..... 84
Laying Tile Pipe, A Good Method of..... 4
Laying Tile Pipe, A Quick Method of..... 4

	PAGE
Laying Tile Sewers, Methods of	4
Leader Connections to Roof	28
Leaders, Inside Rain	27
Leaders, Outside Rain	27
Leaders, Rain	27
Leaders, Size of Rain	29
Leaders, Trapping of	27
Lead Calked Joints	8
Lead, Effect of Water on	77
Lead Found in Drinking Water	78
Lead in Samples of Ground Water	79
Lead in Samples of Surface Water	80
Lead Pipe, Formula for Bursting Pressure in	114
Lead Pipes	112
Lead Pipes, Formula for Safe Thickness for	115
Lead Pipes, Size and Weight of	115
Lead Traps, Weights of	48
Leveling Tile Pipe	4
Lift Check Valves	122
Lift of a Pump	137
Lift or Suction Pumps	136
Lifts of Pumps, Suction	138
Lime and Magnesia in Pipe Covering	218
Limit of Material, Elastic	113
Lines, Installation of Fire	152
Lines, Fire	152
Location of Fresh Air Inlet	26
Location for Grease Trap	52
Loss of Head	89
Loss of Head Due to Entry	89
Loss of Head Due to Friction, Formula for	94
Loss of Head in Bends	91
Loss of Head in Bends, Formula for	93
Loss of Head in Pounds	95
Loss of Head in Straight Pipes	93
Loss of Seal of Traps by Momentum	43
Low-down Combinations	231

M

	PAGE
Magnesia and Lime in Pipe Covering	218
Main, Distributing	136
Main Drain Trap	15
Manifolds, Distributing	133
Material, Absolute Strength of	113
Material, Bursting Stress of	113
Material, Elastic Limit of	113
Material for Stacks	41
Material for Traps	48
Materials for Water Pipes	112
Materials of House Drains	11
Maximum Density of Water	170
Measurement of Heat	168
Measurement of Temperature	168
Measurement of Water	100
Measures, American Equivalents of Metric	249
Measuring Pressure	87
Mechanical Systems of Sewage Discharge	57
Metals, Effect of, on Health	82
Metals, Effect of Waters on	76
Methods of Testing Drainage Systems	64
Meter Accessories	102
Meter, Gem	101
Meter, Hersey Disk	101
Meter, Venturi	100
Meters, Classification of	100
Meters, Types of Water	100
Meters, Velocity	100
Meters, Volume	101
Metric Measures, American Equivalents of	249
Momentum, Loss of Seal of Traps by	43
Mud Drum for Boilers	202

N

	PAGE
Noiseless Water Heaters	185
Noiseless Water Heaters, Capacity of	186
Non-siphon Traps	46
Non-siphon Traps, Evaporation from	47
Non-siphon Traps, Tests of	251
Notable Temperatures of Water	72

O

	PAGE
Offset Siphon Trap	48
One-pipe Drainage System, Example of	34
Outlets, Size of Blow-off Tank	55
Outlets to Stacks above Roof	36
Outside Rain Leaders	27
Overheated Water	212

P

	PAGE
Pantry Sinks	238
Pantry Sinks, Copper	238
Pantry Sinks, Porcelain	238
Pascil's Law of Pressure	87
Peppermint Test	70
Per Capita Water Consumption in Cities	24
Perfect System of Plumbing, Requirements of a	2
Permanently Hard Water	72
Pipe, A Good Method of Laying Tile	4
Pipe, A Quick Method of Laying Tile	4
Pipe Covering, Lime and Magnesia in	218
Pipe, Cutting Cast-iron	9
Pipe, Definition of Soil	30
Pipe, Definition of Vent	31
Pipe, Definition of Waste	30
Pipe, Dimensions and Weights of Wrought	119
Pipe, Effect of Galvanized, on Water	79
Pipe Expansion	209
Pipe, Expansion of Cast-iron	216
Pipe Fittings, Iron	120
Pipe, Formula for Bursting Pressure in Lead	114
Pipe House Sewer, Iron	7
Pipe Joints, Tile	5
Pipe, Objections to Use of Tile	6
Pipe, Leveling Tile	4
Pipe, Strength of Seam of Wrought	258
Pipe, Strength of Wrought	257
Pipe, Tensile Strength of Wrought	257
Pipe, Threading Wrought	260
Pipe, Tile Sewer, May be Used When	6
Pipe, Torsional Strength of Wrought	258
Pipe, Weights of Cast-iron	7
Pipe, Wrought	257
Pipe, Wrought Iron and Steel	255
Pipes and Valves, Emptying	136

	PAGE
Pipes, Brass	118
Pipes, Circulation	215
Pipes, Diameters and Areas of	29
Pipes, Electrolysis of	265
Pipes, Equation of	130
Pipes, Expansion of	215
Pipes, Flow of Water through	89
Pipes, Flow of Water through	96
Pipes, Flush	228
Pipes, Formula for Expansion of	216
Pipes, Formula for Safe Thickness of Lead	115
Pipes for Vimometers, Size of	231
Pipes, Friction in	89
Pipes, Laws for Friction in	93
Pipes, Lead	112
Pipes, Loss of Head in Straight	93
Pipes, Materials for Water	112
Pipes, Quality and Strength of	112
Pipes, Size and Weight of Lead	115
Pipes, Size of Soil and Waste	39
Pipes, Size of Soil, Waste and Vent	40
Pipes, Size of Vent	40
Pipes, Size of Water	131
Pipes, Velocity of Flow in	96
Pipes, Wrought	117
Pipes, Wrought-iron and Steel	117
Piping for Flush Valve Systems, Rule for Proportioning	231
Piston-pump Sewage Ejectors	60
Plugs, Testing	66
Plumbing Fixtures	221
Plumbing Fixtures, Classification of	221
Plumbing, Requirements of a Perfect System of	2
Plumbing Systems	3
Porcelain Pantry Sinks	238
Pounds, Loss of Head in	95
Power of Water, Solvent	75
Pressure and Head of Water	86
Pressures and Heads of Water	88
Pressure, Coefficients of	111
Pressure Filters	160
Pressure Filters, Capacity and Dimensions of	162
Pressure Head	85
Pressure in Lead Pipe, Formula for Bursting	114
Pressure, Laws of Hydraulic	84
Pressure, Measuring	87
Pressure of Water	86
Pressure on Traps, Effect of Back	46
Pressure, Pascil's Law of	87
Pressure Regulators	126
Pressure, Safe Working	113
Principles of a Pump	136
Properties of Hot Water	170
Properties of Saturated Steam	190
Properties of Water	71
Proportioning Flush Valve Systems, Rule for	231
Proportioning Size of Tanks and Boilers	204
Proportioning Water Supply Systems	132
Pump, Coagulant	157
Pump, Lift of a	137
Pump, Slip of a	139
Pumps	136
Pumps, Air Chambers on	140
Pumps, Capacities of Centrifugal	59
Pumps, Capacity and Size of Quimby	145
Pumps, Capacity of Steam	142
Pumps, Force	138
Pumps, Formula for Capacity of Steam	142
Pumps, House	143
Pumps, Lift or Suction	136
Pump, Principles of Operating	136
Pumps, Quimby Screw	143
Pumps, Single, Direct-acting, Steam	141
Pumps, Steam	141
Pumps, Suction Lifts of	138
Pumping Engines, Hot Air	146
Purification of Waters	155

Q

	PAGE
Quality and Strength of Pipes	112
Quantity, Formula for	99
Quimby Pumps, Capacity and Size of	145
Quimby Screw Pump	143

R

	PAGE
Radiation and Absorption of Heat	168
Radiation of Heat	167
Rain and Shower Baths	243
Rain Leaders	27
Rain Leaders, Inside	27
Rain Leaders, Outside	27
Rain Leaders, Size of	29
Rainfalls, Intensity of	19
Range Boilers	199
Range Boilers, Capacities of Galvanized	201
Range Boilers, Cold-weld	202
Range Boilers, Copper	199
Range Boilers, Galvanized	200
Range of Fire Streams	152
Range of Solvency of Water	75
Rapid Sand Filtration	155
Recharging Air Chambers, Contrivance for	140
Reels, Hose	154
Refrigerator Safes	56
Refrigerator Safes, Trapping	56
Refrigerator Waste Piping, System of	55
Refrigerator Wastes	55
Regulators, Draft	213
Regulators, Pressure	126
Regulators, Steam Coil	214
Relative Corrosion of Iron and Steel Pipe	263
Requirements of a Perfect System of Plumbing	2
Requirements of a Sanitary Closet	222
Requirements of Lavatories, Sanitary	240
Requirements of Sanitary Fixtures	221
Roof Flashings	37
Roof, Leader Connections to	28
Roof, Outlets to Stacks above	36
Rule for Capacity of Drains	23
Rule for Capacity of Water Heaters	179
Rule for Determining Size of Leaders	29
Rule for Proportioning Piping for Flush Valve Systems	231
Rule for Size of Air Chambers	110
Rule for Size of Smoke Flues	181
Rule for Size of Steam Coils	183
Rule to Find Proper Fall for Drains	17
Rule to Find Size of Blow-off Tanks	54

	PAGE
Rule to Find Steam Required to Heat Water	190
Rust Joints	8

S

Safety Appliances	208
Safety Copper Boilers	199
Safety Valve	208
Safes, Refrigerator	56
Safes, Trapping Refrigerator	56
Safe Working Pressure	113
Sand Filtration, Rapid	155
Sanitary Closet, Requirements of	222
Sanitary Fixtures, Requirements of	221
Sanitary Requirements of Lavatories	240
Sanitas Trap	49
Saturated Steam, Properties of	190
School Sinks	231
Screw Pumps, Quimby	143
Scullery Fixtures	237
Seal of Traps, Loss of, by Momentum	43
Seamless Brass Tubing	120
Seam of Wrought Pipe, Strength of	258
Seat Baths	243
Seats, Water Closet	226
Sections, Testing Drainage Systems in	68
Self-closing Faucets	126
Self-scouring Traps	47
Self-siphonage of Traps	42
Service Connections	128
Sewage Discharge, Mechanical Systems of	57
Sewage Ejectors, Centrifugal Pump	58
Sewage Ejectors, Compressed Air	60
Sewage Ejectors, Piston Pump	60
Sewer and Tide-water Traps	15
Sewer, Connection to Street	9
Sewer, Iron Pipe House	7
Sewer Methods of Laying Tile	4
Sewer Pipe, Tile, May be Used When	6
Sewer, The House	3
Sewers, Tile House	3
Shower and Rain Baths	243
Siamese Twin Connection	153
Single, Direct-acting Steam Pumps	141
Single Pipe Drainage Systems	31
Sinks	237
Sinks, Copper Pantry	238
Sinks, Hospital Slop	234
Sinks, Kitchen	237
Sinks, Pantry	238
Sinks, Porcelain Pantry	238
Sinks, School	231
Sinks, Slop	236
Siphonage of Traps	42
Siphonage of Traps by Aspiration	43
Siphon-jet Closets	225
Siphon-jet Urinals	235
Siphon Trap, Offset	48
Siphon Traps	41
Size and Capacity of Quimby Pumps	145
Size and Weight of Lead Pipes	115
Size of Air Chambers, Formula for	111
Size of Air Chambers, Rule for	110
Size of Blow-off Tank Outlets	55
Size of Blow-off Tanks	54
Size of Drains, Formula for	20
Size of Fixture Trap	48
Size of Fresh Air Inlets	27
Size of Grease Traps	52

	PAGE
Size of House Drains	18
Size of House Tanks	148
Size of Pipes for Vimometers	231
Size of Rain Leaders	29
Size of Smoke Flues, Rule for	181
Size of Soil and Waste Pipes	39
Size of Soil and Waste Stacks	39
Size of Soil, Waste and Vent Pipes	40
Size of Standpipes	152
Size of Steam Coils, Formula for	183
Size of Steam Coils, Rule for	183
Size of Tanks and Boilers, Proportioning	204
Size of Vent Pipes	40
Size of Vent Stacks	39
Size of Water Pipes	131
Slip of a Pump	139
Slop Sinks	236
Slop Sinks, Hospital	237
Smoke Flues	180
Smoke Flues, Rule for Size of	181
Smoke Test	70
Soap Required to Soften Water	163
Soap Solution, Standard	74
Softening Apparatus, Water	164
Softening of Water	161
Soften Water, Soap Required to	163
Soft Water	72
Soft Water, Economy of	161
Soil and Waste Pipes, Size of	39
Soil and Waste Stacks, Expansion of	35
Soil and Waste Stacks, Size of	39
Soil Fixtures	222
Soil Pipe Connection to Closets	227
Soil Pipe, Definition of	30
Soil Stack, Definition of	30
Soil, Waste and Vent Pipes, Size of	40
Solubility of Water	76
Solution, Standard Soap	74
Solvency of Water, Range of	75
Solvent Power of Water	75
Square Foot, Decimals of a	247
Square Foot, Square Inches in Decimals of a	247
Square Inches in Decimals of a Square Foot	247
Stack, Definition of Soil	30
Stack, Definition of Vent	30
Stack, Definition of Waste	30
Stacks and Branches	30
Stacks above Roof, Outlet to	86
Stacks, Expansion of Soil and Waste	35
Stacks, Material for	41
Stacks, Size of Soil and Waste	39
Stacks, Size of Vent	39
Stacks, Supports for	41
Stall Urinals	235
Standard Gallons of Water, Capacity and Weight of Different	71
Standard Soap Solution	74
Standpipes, Sizes of	152
Steam Coil Regulators	214
Steam Coils, Formula for Size of	183
Steam Coils, Heating Water with	182
Steam Coils, Rule for Size of	183
Steam, Heat Transmitted by, to Water	188
Steam in Contact, Heating Water by	184
Steam Pumps	141
Steam Pumps, Capacity of	142
Steam Pumps, Formula for Capacity of	142

	PAGE
Steam Pumps, Single, Direct-acting	141
Steam, Properties of Saturated	190
Steam Required to Heat Water	189
Steel and Iron, Corrosion of	263
Steel and Wrought-iron Pipes	117
Steel and Wrought-iron Pipes	255
Storing Hot Water, Tanks for	199
Streams, Range of Fire	152
Street Sewer, Connection to	9
Strength and Quality of Pipes	112
Strength of Material, Absolute	113
Strength of Seam of Wrought Pipe	258
Strength of Wrought Pipe	257
Strength of Wrought Pipe, Tensile	257
Strength of Wrought Pipe, Torsional	258
Stress of Material, Bursting	113
Sub-soil Drainage	63
Sub-soil Drainage, Where Required	63
Sub-soil Water, Disposal of	63
Suction Lifts of Pumps	138
Suction or Lift Pumps	136
Suction Tanks	146
Suction Tanks, Capacity of	147
Supply, Cold Water	71
Supply, Hot Water	167
Supply Systems, Proportioning Water	132
Supply Systems, Water	71
Supports for Boilers and Tanks	203
Supports for House Drains	14
Supports for Stack	41
Sure-seal Trap	49
Sure-seal Trap, Test of the	253
Surface Water, Copper in Samples of	82
Surface Water, Lead in Samples of	80
Surface Water, Zinc in Samples of	81
Swing Check Valve	123
System, Example of One-pipe Drainage	34
System of Plumbing, Requirements of a Perfect	2
System of Refrigerator Waste Piping	55
System of Valving	135
System, The Drainage	3
Systems, Examples of Drainage	31
Systems, Plumbing	3
Systems, Proportioning Water Supply	132
Systems, Rule for Proportioning Piping for Flush Valves	231
System of Sewage Discharge, Mechanical	57
Systems, Single-pipe Drainage	31
Systems, Testing Drainage	64
Systems, Testing Drainage in Sections	68
Systems, Two-pipe Drainage	31
Systems, Water Supply	71

T

	PAGE
Table of Absorption and Radiation of Heat	168
Table of American Equivalents of Metric Measures	249
Table of Boiling Point of Water	174
Table of Capacities of Centrifugal Pumps	59
Table of Capacity of Drains	21
Table of Coefficients of Pressure	111
Table of Decimal Fractions of a Foot	245
Table of Diameters and Areas of Pipes	29
Table of Dimensions and Capacities of Blow-off Tanks	54
Table of Dimensions and Weights of Wrought Pipe	119
Table of Efficiency of Gravity Filters	158
Table of Equation of Pipes	130
Table of Expansion of Cast-iron Pipe	216
Table of Fall for Drains	17
Table of Heads and Pressures of Water	88
Table of Intensity of Rainfalls	19
Table of Intensity of Water Hammer	106
Table of Lead Found in Drinking Water	78
Table of Lead in Samples of Ground Water	79
Table of Lime and Magnesia in Pipe Covering	218
Table of Loss of Head in Pounds	95
Table of Per Capita Water Consumption in Cities	24
Table of Range of Fire Streams	153
Table of Seamless Brass Tubing	1
Table of Size and Weight of Lead Pipes	115
Table of Size of Vent Stacks	39
Table of Sizes of Soil, Waste and Vent Pipes	40
Table of Soap Required to Soften Water	163
Table of Solubility of Water	76
Table of Square Inches in Decimals of a Square Foot	247
Table of Suction Lifts of Pumps	138
Table of Temperature of Fires	170
Table of Transmission of Heat	169
Table of Values of Coefficient f	94
Table of Values of Coefficient m	97
Table of Values of Coefficient n	92
Table of Volume and Density of Water at Different Temperatures	171
Table of Weights of Cast-iron Pipe	7
Table of Weights of Lead Traps	48
Tank and Boiler Connections	205
Tank Outlets, Size of Blow-off	55
Tank, Type of Blow-off	54
Tanks and Boilers, Proportioning Size of	204
Tanks and Boilers, Supports for	203
Tanks, Capacities and Dimensions of Blow-off	54
Tanks, Capacity of Suction	147
Tanks, Covering for	219
Tanks, Flush	228
Tanks for Boilers, Blow-off	53
Tanks for Storing Hot Water	199
Tanks, Hot Water	203
Tanks, House	147
Tanks, Size of Blow-off	54
Tanks, Size of House	148
Tanks, Suction	146
Tanks, Urinal Flush	235
Temperature, Measurement of	168
Temperature of Fires	170
Temperatures, Density and Volume of Water at Different	171
Temperatures of Water, Notable	72
Temporarily Hard Water	72
Tensile Strength of Wrought Pipe	257

	PAGE
Testing Drainage Systems	64
Testing Drainage Systems in Sections	68
Testing Plugs	66
Testing Plugs for Traps:	67
Test, Compressed Air	69
Test of the Centrifugal Trap	254
Test of the Cudell Trap	253
Test of the Hajoca Trap	253
Test of the Sure-seal Trap	253
Test, Peppermint	70
Test, Smoke	70
Tests, Final	70
Tests of Non-siphon Traps	251
Theory of Filtration	155
Thermal Unit, British	168
Thickness of Lead Pipes, Formula for Safe	115
Threading Wrought Pipe	260
Tide Water and Sewer Traps	15
Tile House Sewers	3
Tile Pipe, Good Method of Laying	4
Tile Pipe, Quick Method of Laying	4
Tile Pipe Joints	5
Tile Pipe Leveling	4
Tile Pipe, Objections to Use of	6
Tile Sewer, Methods of Laying	4
Tile Sewer Pipe, May be Used Where	6
Torsional Strength of Wrought Pipe	258
Transfer of Heat	167
Transmission of Heat	169
Transmitted by Steam to Water, Heat	188
Trap, Centrifugal	49
Trap, Clean-sweep	50
Trap, Connecting Several Fixtures to One	50
Trap, Cudell	48
Trap, Distance of Back-vent from	45
Trap Installation, Examples of	50
Trap, Main Drain	15
Trap, Offset Siphon	48
Trap, Sanitas	49
Trap, Sewer and Tide Water	15
Trap, Sure-seal	49
Trap, Test of the Centrifugal	254
Trap, Test of the Cudell	253
Trap, Test of the Hajoca	253
Trap, Test of the Sure-seal	253
Trap, Ventilation	44
Traps, Back-venting	44
Traps, Conditions Governing Use of Grease	51
Traps, Effect of Back Pressure on	46
Traps, Evaporation from Non-siphon	47
Traps, Evaporation of Water from	45
Traps, Fish	102
Traps, Fixture	41
Traps, Grease	51
Traps, Location for Grease	52
Traps, Loss of Seal of, by Momentum	43
Traps, Materials for	48
Traps, Non-siphon	46
Traps, Self-scouring	47
Traps, Self-siphonage of	42
Traps, Siphon	41
Traps, Siphonage of	42
Traps, Siphonage of, by Aspiration	43
Traps, Size of Fixture	48
Traps, Size of Grease	52
Traps, Tests of Non-siphon	251
Traps, Testing Plugs for	67
Traps, Types of Commercial	48
Traps, Types of Grease	53
Traps, Vent Connections to	44
Traps, Weights of Lead	48
Trapping Kitchen Sinks and Laundry Trays	50
Trapping of Leaders	27
Trapping Refrigerator Safes	56
Trapping Yard and Area Drains	30
Trays, Laundry	239
Tubing, Seamless Brass	120
Tubs, Bath	241
Twin Connection, Siamese	153
Two-pipe Drainage Systems	31
Type of Blow-off Tank	54
Types of Grease Traps	53
Types of Traps, Commercial	48
Types of Water Meters	100
Troughs, Latrine	231

U

Unit, British Thermal	168
Unit of Heat	168
Urinal Flush Tanks	235
Urinals	233
Urinals, Siphon-jet	235
Urinals, Stall	235

V

Values of coefficient *f*	94
Values of coefficient *m*	97
Values of coefficient *n*	92
Valve, Safety	208
Valve, Swing Check	123
Valves and Cocks	120
Valves and Pipes, Emptying	136
Valves, Angle	122
Valves, Flush	228
Valves, Flush	230
Valves, Gate	120
Valves, Globe	121
Valves, Lift Check	122
Valving, System of	135
Vein, The Contracted	89
Velocity Meters	100
Velocity of Flow, Formulas for	97
Velocity of Flow in Drains	17
Velocity of Flow in Pipes	96
Vent Connections to Traps	44
Vent Pipe, Definition of	31
Vent Pipes, Size of	40
Vent, Soil and Waste Pipes, Size of	40
Vent Stack, Definition of	30
Vent Stacks, Size of	39
Ventilation of Closet Compartments	232
Ventilation, Trap	44
Venturi Meter	100
Vimometers, Size of Pipe for	231
Volume and Density of Water at Different Temperatures	171
Volume Meters	101

W

Washdown Water Closets	224
Washout Water Closets	223
Waste and Soil Pipes, Size of	39
Waste and Soil Stacks, Expansion of	35
Waste and Soil Stacks, Size of	39
Waste Pipe, Definition of	30
Waste Piping, System of Refrigerator	55

	PAGE
Waste Stack, Definition of	30
Waste, Soil and Vent Pipes, Size of	40
Wastes, Refrigerator	55
Water, Absorption of Gases by	83
Water at Different Temperatures, Density and Volume of	171
Water Backs	175
Water Backs and Coils, Capacity of	176
Water, Boiling Point of	173
Water, Capacity and Weight of Different Standard Gallons of	71
Water, Circulation of	173
Water, Classification of	72
Water Closet Seats	226
Water Closets	222
Water Closets, Washdown	224
Water Closets, Washout	223
Water, Coagulation of	155
Water Consumption in Cities, per Capita	24
Water, Copper in Samples of Ground	82
Water, Copper in Samples of Surface	82
Water, Disposal of Sub-soil	63
Water, Economy of Soft	161
Water, Effect of Galvanized Pipe on	79
Water, Effect of, on Lead	77
Water, Effect of, on Metals	76
Water, Evaporation of, from Traps	45
Water, Expansion of	170
Water, Filtration of	155
Water, Flow of, through Pipes	89
Water, Flow of, through Pipes	96
Water, Formula for Contraction in Bulk of	173
Water, Formula for Increase in Bulk of	172
Water Hammer	103
Water Hammer, Intensity of	106
Water, Hard	72
Waters, Hardness of	74
Water, Head and Pressure of	86
Waters, Heads and Pressures of	88
Water Heaters	177
Water Heaters, Automatic	198
Water Heaters, Capacity of	178
Water Heaters, Capacity of Noiseless	186
Water Heaters, Formula for Capacity of	179
Water Heaters, Garbage Burning	180
Water Heaters, Incrustation of	181
Water Heaters, Instantaneous	195
Water Heaters, Noiseless	185
Water Heaters, Rule for Capacity of	179
Water Heating by Gas	195
Water, Heating by Steam in Contact	184
Water Heating Coils	176
Water-heater, Gas	197
Water Heating with Steam Coils	182
Water, Heat Transmitted by Steam to	188
Water, Lead Found in Drinking	78
Water, Lead in Samples of Surface	80
Water, Maximum Density of	170
Water, Measurement of	100
Water Meters, Types of	100
Water, Notable Temperatures of	72
Water, Overheated	212
Water, Permanently Hard	72
Water Pipes, Materials for	112
Water Pipes, Size of	131
Water, Pressure of	86
Water, Properties of	71
Water, Properties of Hot	170
Water, Purification of	155
Water, Range of Solvency of	75
Water, Soap Required to Soften	163
Water, Soft	72
Water Softening Apparatus	164
Water, Softening of	161
Water, Solubility of	76
Water, Solvent Power of	75
Water, Steam Required to Heat	189
Water Supply, Cold	71
Water Supply Details	128
Water Supply Equipments, Complete	149
Water Supply, Hot	167
Water Supply Systems	71
Water Supply Systems, Proportioning	132
Water, Tanks for Storing Hot	199
Water Tanks, Hot	203
Water, Temporarily Hard	72
Water, Weight of	72
Water, Zinc in Samples of Ground	81
Water, Zinc in Samples of Surface	81
Weight and Capacity of Different Standard Gallons of Water	71
Weight and Size of Lead Pipes	115
Weight of Water	72
Weights and Dimensions of Wrought Pipe	119
Weights of Cast-iron Pipe	7
Weights of Lead Traps	48
Working Pressures, Safe	113
Wrought-iron and Steel Pipes	117
Wrought-iron and Steel Pipe	255
Wrought Pipes	117
Wrought Pipe	257
Wrought Pipe, Strength of	257
Wrought Pipe, Strength of Seam of	258
Wrought Pipe, Tensile Strength of	257
Wrought Pipe, Threading	260
Wrought Pipe, Torsional Strength of	258
Wrought Pipe, Weights and Dimensions of	119

Y

Yard and Area Catch Basins	29
Yard and Area Drains	29
Yard and Area Drains, Trapping	30

Z

Zinc in Samples of Ground Water	81
Zinc in Samples of Surface Water	81

LIBRARY OF THE UNIVERSITY OF CALIFORNIA

Chasmar-Winchell Press New York and Pittsburgh

RETURN TO the circulation desk of any
University of California Library
or to the
NORTHERN REGIONAL LIBRARY FACILITY
Bldg. 400, Richmond Field Station
University of California
Richmond, CA 94804-4698

ALL BOOKS MAY BE RECALLED AFTER 7 DAYS

- 2-month loans may be renewed by calling (510) 642-6753
- 1-year loans may be recharged by bringing books to NRLF
- Renewals and recharges may be made 4 days prior to due date.

DUE AS STAMPED BELOW

OCT 25 2004

12,000 (11/95)

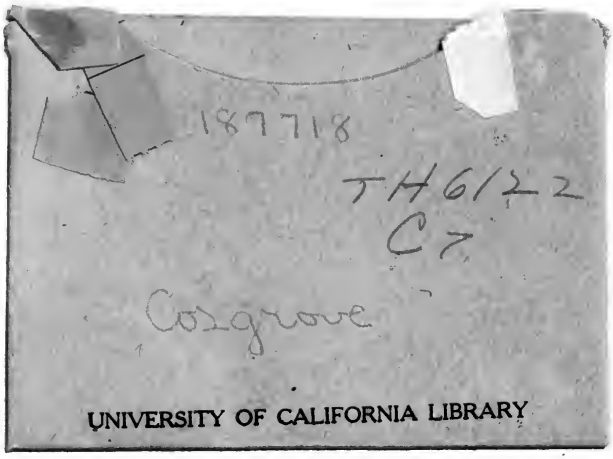
187718
TH6122
C7
Cosgrove
UNIVERSITY OF CALIFORNIA LIBRARY